JVC

SERVICE MANUAL

COMPACT COMPONENT SYSTEM

MX-J570V
MX-J680V

Area Suffix
US ---------- Singapore
UX ---------- Saudi Arabia

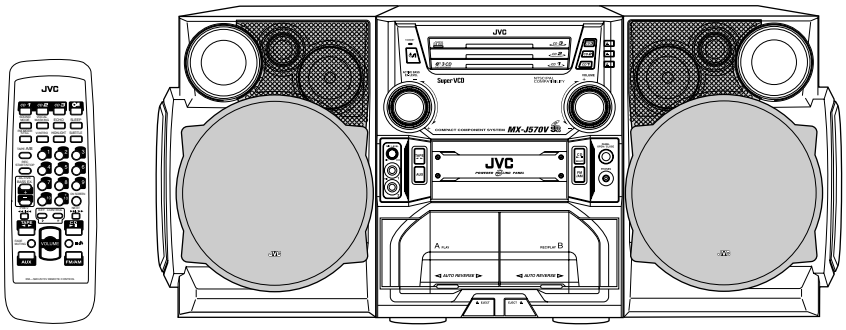

This illustration is MX-J570V

Each difference point

Model	CD/DECK/RECEIVER	SPEAKER	Color			
			Tray fitting	Panel	Net	Front
MX-J570V	CA-MXJ570V	SP-MXJ570V	Silver	Silver & Blue	Light blue	Silver
MX-J680V	CA-MXJ680V	SP-MXJ680V		Champagne-gold	Gray	Champagne-gold

Contents

Safety precautions ---------- 1-2
Important for laser products ---------- 1-3
Preventing static electricity ---------- 1-4
Precautions at disassembling and parts replacement -------- 1-5
Disassembly method ---------- 1-6
Adjustment method ---------- 1-29
Diagnosis which uses extension wire method --------- 1-33
Flow of functional operation until TOC read ---------- 1-34
Maintenance of laser pickup ---------- 1-35
Replacement of laser pickup ---------- 1-35
Description of major ICs ---------- 1-36

COPYRIGHT © 2000 VICTOR COMPANY OF JAPAN, LTD.

No.20853
Jul. 2000

Safety Precautions

1. This design of this product contains special hardware and many circuits and components specially for safety purposes. For continued protection, no changes should be made to the original design unless authorized in writing by the manufacturer. Replacement parts must be identical to those used in the original circuits. Services should be performed by qualified personnel only.

2. Alterations of the design or circuitry of the product should not be made. Any design alterations of the product should not be made. Any design alterations or additions will void the manufacturer`s warranty and will further relieve the manufacture of responsibility for personal injury or property damage resulting therefrom.

3. Many electrical and mechanical parts in the products have special safety-related characteristics. These characteristics are often not evident from visual inspection nor can the protection afforded by them necessarily be obtained by using replacement components rated for higher voltage, wattage, etc. Replacement parts which have these special safety characteristics are identified in the Parts List of Service Manual. Electrical components having such features are identified by shading on the schematics and by (⚠) on the Parts List in the Service Manual. The use of a substitute replacement which does not have the same safety characteristics as the recommended replacement parts shown in the Parts List of Service Manual may create shock, fire, or other hazards.

4. The leads in the products are routed and dressed with ties, clamps, tubings, barriers and the like to be separated from live parts, high temperature parts, moving parts and/or sharp edges for the prevention of electric shock and fire hazard. When service is required, the original lead routing and dress should be observed, and it should be confirmed that they have been returned to normal, after re-assembling.

5. Leakage currnet check (Electrical shock hazard testing)
   After re-assembling the product, always perform an isolation check on the exposed metal parts of the product (antenna terminals, knobs, metal cabinet, screw heads, headphone jack, control shafts, etc.) to be sure the product is safe to operate without danger of electrical shock.
   Do not use a line isolation transformer during this check.
   - Plug the AC line cord directly into the AC outlet. Using a "Leakage Current Tester", measure the leakage current from each exposed metal parts of the cabinet , particularly any exposed metal part having a return path to the chassis, to a known good earth ground. Any leakage current must not exceed 0.5mA AC (r.m.s.)
   - Alternate check method
     Plug the AC line cord directly into the AC outlet. Use an AC voltmeter having, 1,000 ohms per volt or more sensitivity in the following manner. Connect a 1,500Ω 10W resistor paralleled by a 0.15μF AC-type capacitor between an exposed metal part and a known good earth ground.
     Measure the AC voltage across the resistor with the AC voltmeter.
     Move the resistor connection to eachexposed metal part, particularly any exposed metal part having a return path to the chassis, and meausre the AC voltage across the resistor. Now, reverse the plug in the AC outlet and repeat each measurement. voltage measured Any must not exceed 0.75 V AC (r.m.s.). This corresponds to 0.5 mA AC (r.m.s.).

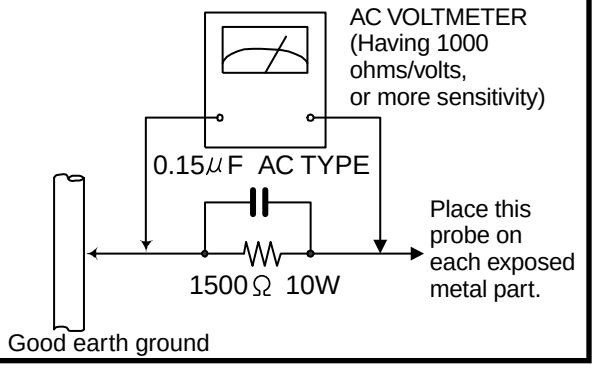

Warning

1. This equipment has been designed and manufactured to meet international safety standards.
2. It is the legal responsibility of the repairer to ensure that these safety standards are maintained.
3. Repairs must be made in accordance with the relevant safety standards.
4. It is essential that safety critical components are replaced by approved parts.
5. If mains voltage selector is provided, check setting for local voltage.

⚠ ***CAUTION*** **Burrs formed during molding may be left over on some parts of the chassis. Therefore, pay attention to such burrs in the case of preforming repair of this system.**

Important for laser products

1.CLASS 1 LASER PRODUCT

2.DANGER : Invisible laser radiation when open and inter lock failed or defeated. Avoid direct exposure to beam.

3.CAUTION : There are no serviceable parts inside the Laser Unit. Do not disassemble the Laser Unit. Replace the complete Laser Unit if it malfunctions.

4.CAUTION : The compact disc player uses invisible laser radiation and is equipped with safety switches which prevent emission of radiation when the drawer is open and the safety interlocks have failed or are de feated. It is dangerous to defeat the safety switches.

5.CAUTION : If safety switches malfunction, the laser is able to function.

6.CAUTION : Use of controls, adjustments or performance of procedures other than those specified herein may result in hazardous radiation exposure.

⚠ ***CAUTION*** **Please use enough caution not to see the beam directly or touch it in case of an adjustment or operation check.**

VARNING : Osynlig laserstrålning är denna del är öppnad och spårren är urkopplad. Betrakta ej strålen.

VARO : Avattaessa ja suojalukitus ohitettaessa olet alttiina näkymättömälle lasersäteilylle.Älä katso säteeseen.

ADVARSEL : Usynlig laserstråling ved åbning , når sikkerhedsafbrydere er ude af funktion. Undgå udsættelse for stråling.

ADVARSEL : Usynlig laserstråling ved åpning,når sikkerhetsbryteren er avslott. unngå utsettelse for stråling.

REPRODUCTION AND POSITION OF LABELS

WARNING LABEL

DANGER : Invisibie laser radiation when open and interlock or defeated.
AVOID DIRECT EXPOSURE TO BEAM (e)

VARO : Avattaessa ja suojalukitus ohitettaessa olet alttiina näkymättömälle lasersäteilylle.Älä katso säteeseen. (d)

VARNING : Osynlig laserstrålning är denna del är öppnad och spårren är urkopplad. Betrakta ej strålen. (s)

ADVARSEL :Usynlig laserstråling ved åbning , når sikkerhedsafbrydere er ude af funktion. Undgå udsættelse for stråling. (f)

CLASS 1
LASER PRODUCT

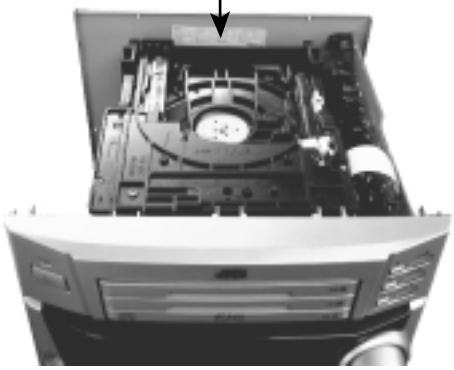

Preventing static electricity

1. Grounding to prevent damage by static electricity

Electrostatic discharge (ESD), which occurs when static electricity stored in the body, fabric, etc. is discharged, can destroy the laser diode in the traverse unit (optical pickup). Take care to prevent this when performing repairs.

2. About the earth processing for the destruction prevention by static electricity

In the equipment which uses optical pick-up (laser diode), optical pick-up is destroyed by the static electricity of the work environment.
Be careful to use proper grounding in the area where repairs are being performed.

2-1 Ground the workbench

Ground the workbench by laying conductive material (such as a conductive sheet) or an iron plate over it before placing the traverse unit (optical pickup) on it.

2-2 Ground yourself

Use an anti-static wrist strap to release any static electricity built up in your body.

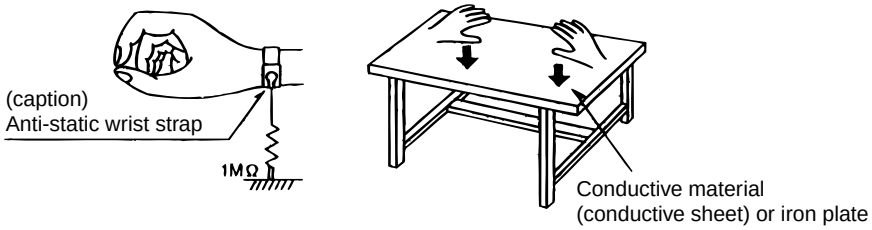

3. Handling the optical pickup

1. In order to maintain quality during transport and before installation, both sides of the laser diode on the replacement optical pickup are shorted. After replacement, return the shorted parts to their original condition. (Refer to the text.)

2. Do not use a tester to check the condition of the laser diode in the optical pickup. The tester's internal power source can easily destroy the laser diode.

4. Handling the traverse unit (optical pickup)

1. Do not subject the traverse unit (optical pickup) to strong shocks, as it is a sensitive, complex unit.

2. Cut off the shorted part of the flexible cable using nippers, etc. after replacing the optical pickup. For specific details, refer to the replacement procedure in the text. Remove the anti-static pin when replacing the traverse unit. Be careful not to take too long a time when attaching it to the connector.

3. Handle the flexible cable carefully as it may break when subjected to strong force.

4. It is not possible to adjust the semi-fixed resistor that adjusts the laser power. Do not turn it

Attention when traverse unit is decomposed

***Please refer to "Disassembly method" in the text for pick-up and how to detach the CD traverse mechanism.**

1. Remove the disk stopper and T. bracket on the CD changer mechanism assembly.
2. Disconnect the harness from connector on the CD motor board.
3. CD traverse unit is put up as shown in Fig.1.
4. Solder is put up before the card wire is removed from connector CN601 on the CD servo control board as shown in Fig. 2.
   (When the wire is removed without putting up solder, the CD pick-up assembly might destroy.)
5. Please remove solder after connecting the card wire with CN601 when you install picking up in the substrate.

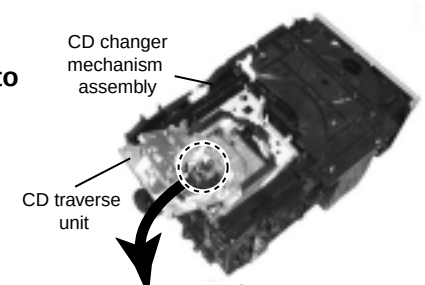

Fig.1

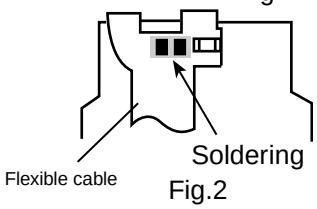

Fig.2

Precautions at disassembling and parts replacement

This model is charged with electricity on the power board even if the power cord is unplugged.
Therefore, always discharge electricity in accordance with the steps given below before starting disassembling of the unit and/or replacement of parts.

1. While referring to the disassembling steps, remove the metal cover and the CD changer mechanism.

2. Set electrical resistances of 1kohm 1/4W to the places between the + and - terminals of the respective condensers C204 and C205 on the power board, and discharge electricity for 4 ~ 5 seconds.

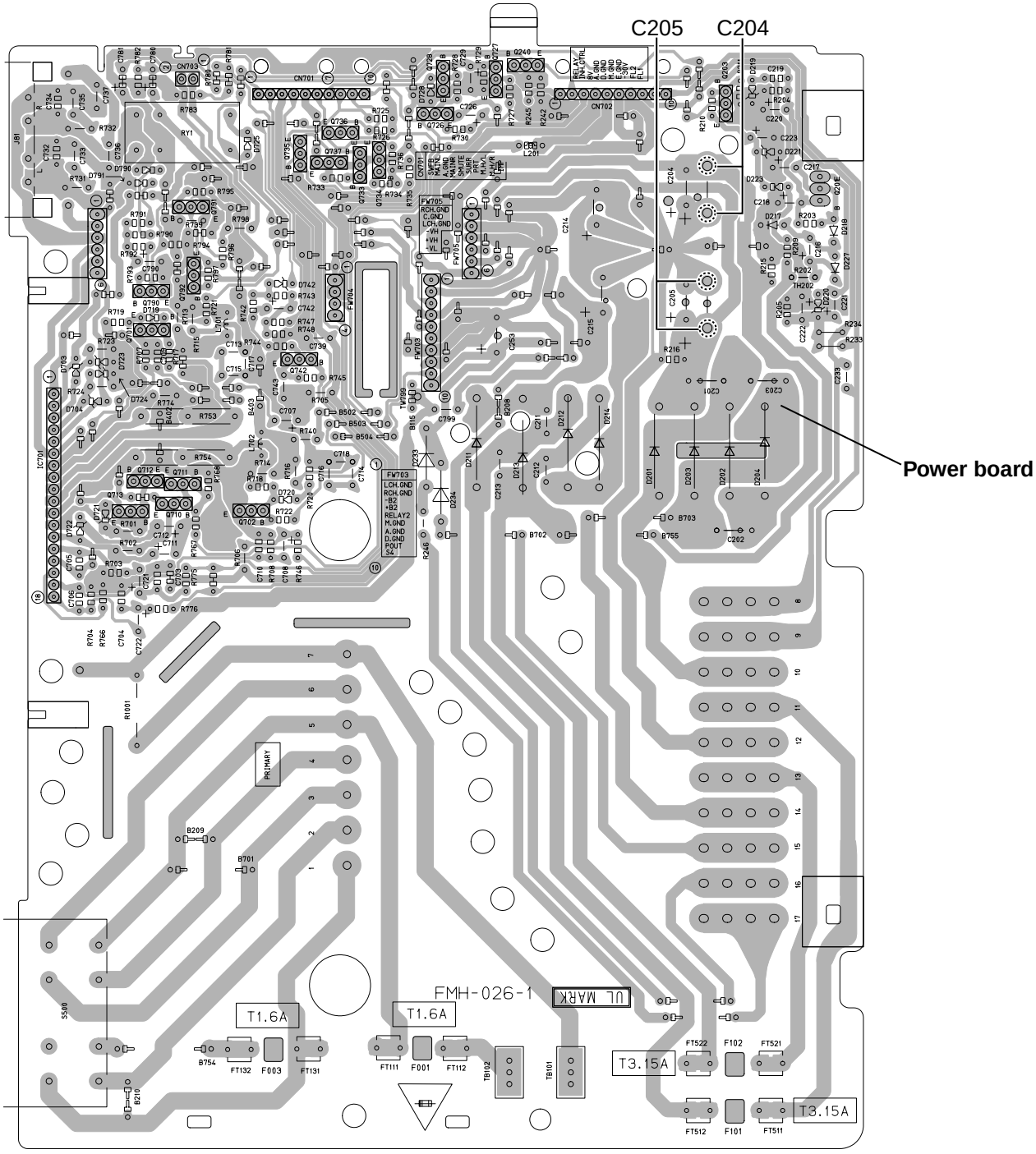

Disassembly method

<Main body>

■ Removing the metal cover

(See Fig.1 to 3)

1. Remove the six screws **A** attaching the metal cover on the back of the body.

2. Remove the two screws **B** attaching the metal cover on both sides of the body.

3. Remove the metal cover from the body by lifting the rear part of the cover.

ATTENTION: Do not break the front panel tab fitted to the metal cover.

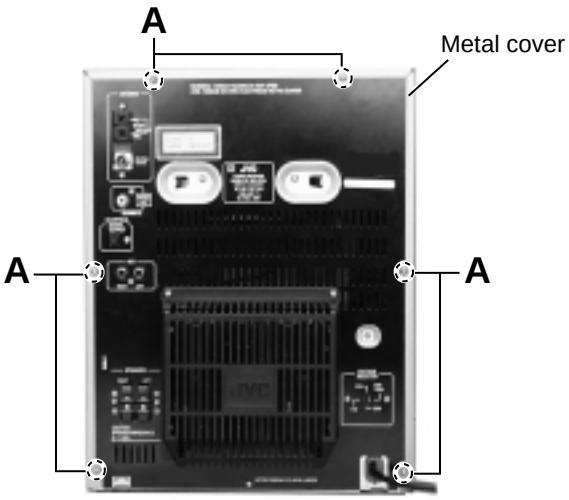

Fig.1

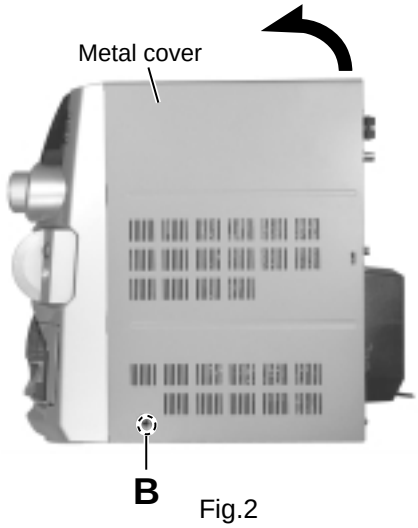

Fig.2

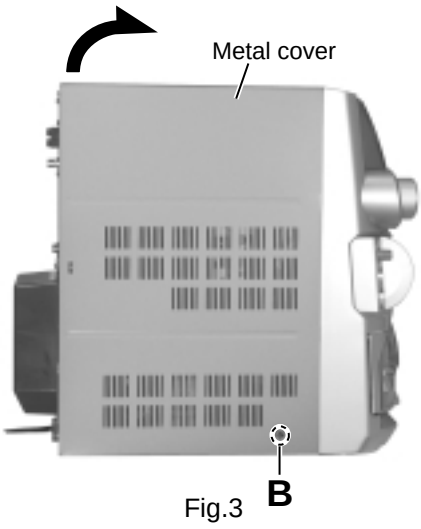

Fig.3

■Removing the CD changer mechanism assembly (See Fig.4 to 6)

- Prior to performing the following procedure, remove the metal cover.

1. For the card wire connecting the CD changer mechanism board and the main board, disconnect it from connector CN868 on the main board.

2. Remove the two screws **C** attaching the CD changer mechanism assembly on both sides of the body.

3. Remove the two screws **D** attaching the CD changer mechanism assembly to the rear panel. Remove the screw **E** attaching the AUX terminal on the back of the body.

4. Remove the screw **F** attaching the video out terminal on the back of the body. Then disconnect it from connector CN102 on the video CD board, and pull out the earth wire TW100 on the video CD board.

5. Pull the top of rear panel and the front panel assembly outward respectively, then remove the CD changer mechanism assembly and video out board by lifting the rear part of the CD changer mechanism assembly.

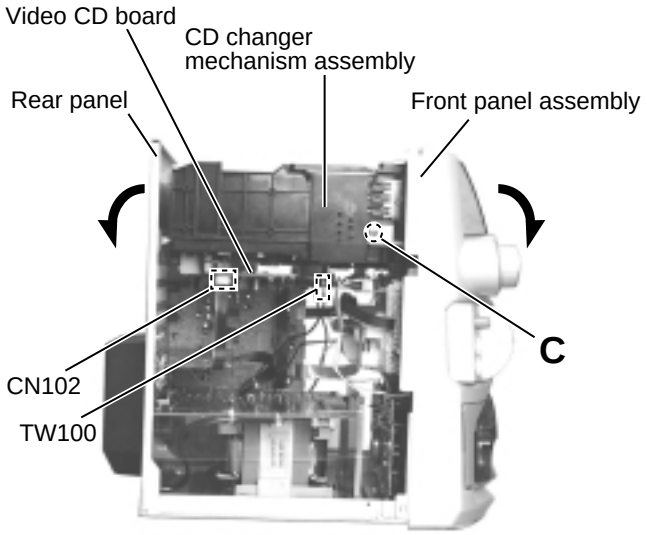

Fig.4

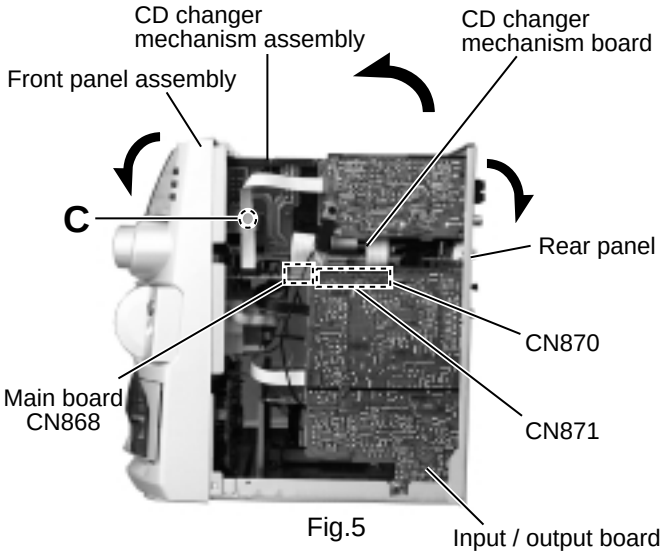

Fig.5

■Removing the video CD board (See Fig.7)

- Prior to performing the following procedure, remove the CD changer mechanism assembly.

1. Reverse the CD changer mechanism assembly.

2. Remove the two screws **H** attaching the bracket.

3. Remove the screw **I** attaching the video CD board.

4. Disconnect the card wire from connector CN100 and CN101 on the video CD board.

5. At first, remove the claw **a**. Then remove the claw **b** while raising the video CD board in the direction of the arrow mark as figure. After removing the claw **b**, you can removing the video CD board by pulling it backward.

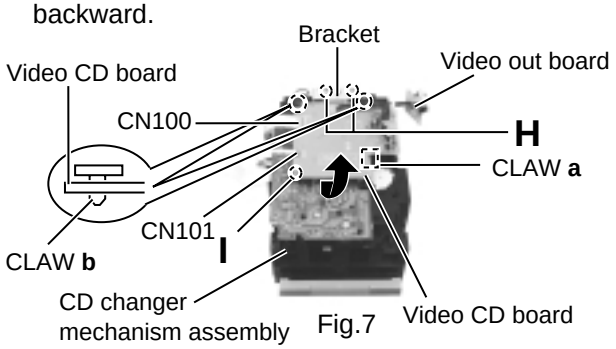

Fig.7

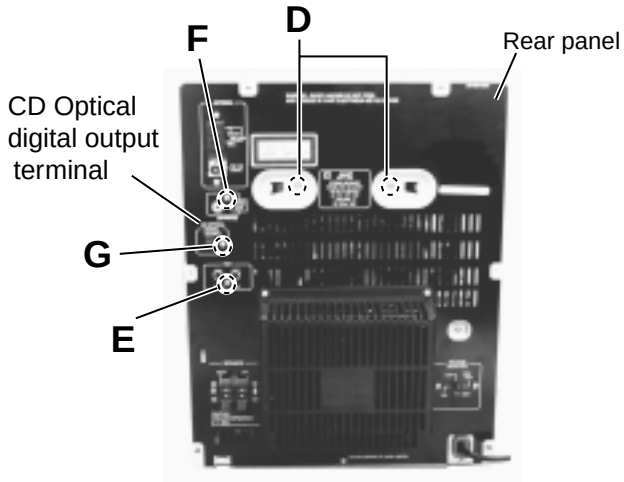

Fig.6

■Removing the front panel assembly (See Fig.8 to 10)

- Prior to performing the following procedure, remove the metal cover and the CD changer mechanism assembly.

1. Disconnect the card wire from connector CN865 on the main board and pull out the earth wire on the main board.
2. Disconnect the card wire from connector CN315 on the input / output board.
3. Disconnect the harness from connector CN912 on the input / output board.
4. Disconnect the harness from connectors CN900 and CN901 on the relay board on the back of the front panel assembly respectively.
5. Disconnect connector CN870 and CN871 on the input/output board from the main board respectively.
6. Remove the four screws **J** attaching the front panel assembly on the bottom of the body.
7. Release the two joints **b** and **c** on the lower part of the sides using a screwdriver, and remove the front panel assembly toward the front.

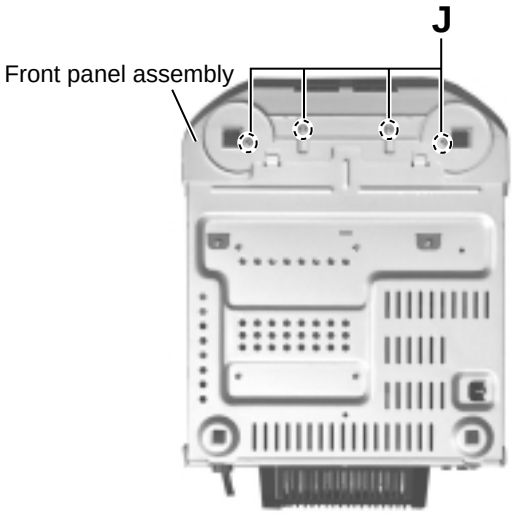

Fig.8

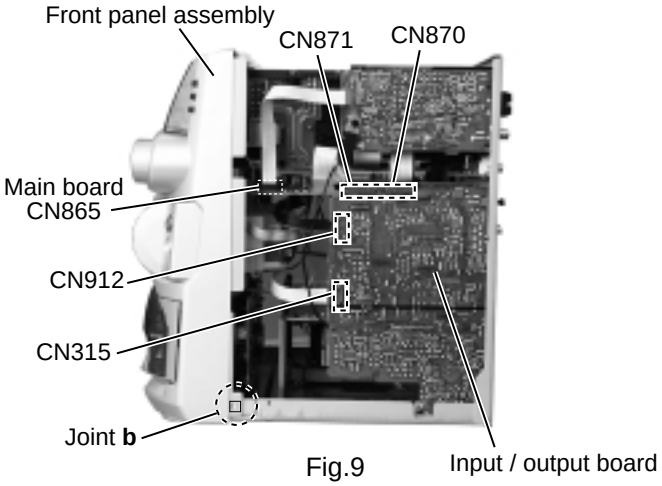

Fig.9

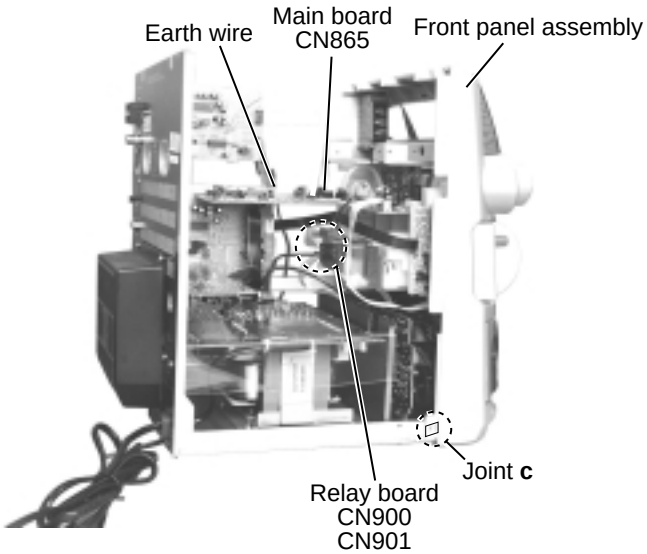

Fig.10

<Front panel assembly>

■ Removing the Microphone terminal board assembly (See Fig.11 and 12)

・Prior to performing the following procedure, remove the metal cover, CD changer mechanism assembly and the front panel assembly.

1. Pull out the MIC volume knob from the front side.

2. Remove the screw **K** attaching earth wire. then release the earth wire from the clamp on the upper part of the cassette mechanism assembly.

3. Remove the two screws **L** attaching the microphone terminal board assembly.

4. Remove the microphone terminal board assembly toward you.

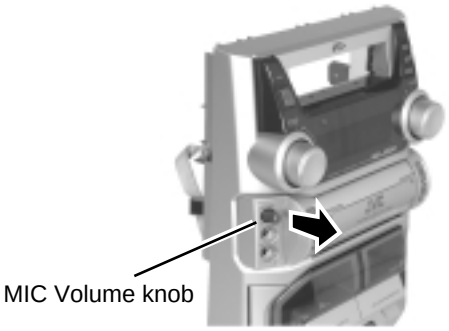

Fig.11

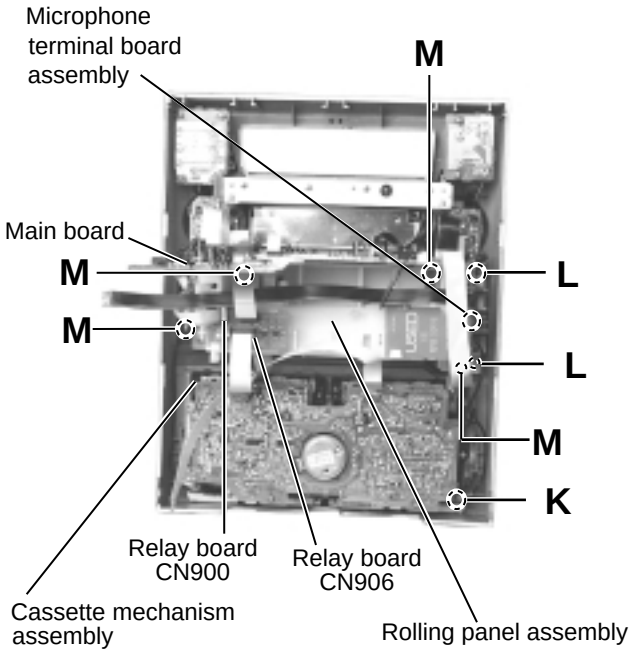

Fig.12

■ Removing the rolling panel assembly (See Fig.12 and 13)

・Prior to performing the following procedure, remove the microphone terminal boare .

1. Disconnect the harness from connector CN900 and CN906 on the relay board on the back of the rolling panel assembly.

2. Disconnect the harness from connector CN862, CN863, CN850, CN851 and CN815 on the main board respectively. Disconnect the card wire from connector CN880 on the main board.

3. Disconnect the card wire from connector CN869 and the harness from CN883 and CN884 on the main board respectively.

4. Remove the four screws **M** attaching the rolling panel assembly.

5. Remove the rolling panel assembly toward you.

ATTENTION: For the harness which should be connected to connector CN869, CN883 and CN884 on the main board, get them through the slots under the rolling panel when reattaching the rolling panel assembly to the front panel (Refer to Fig.13)

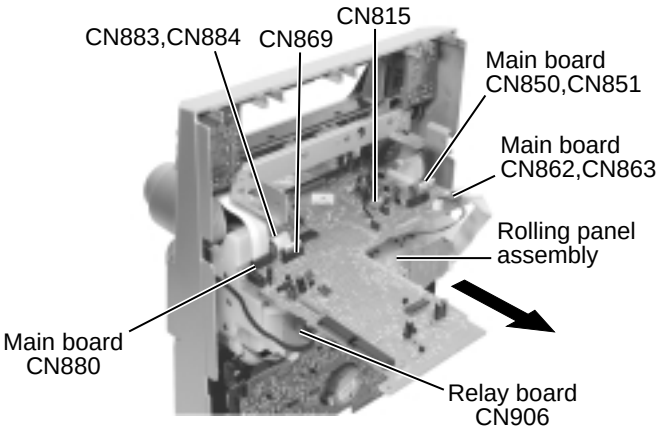

Fig.13

■Removing the main board (See Fig.14 and 15)

- Prior to performing the following procedure, remove the front panel assembly, the microphone terminal board and the rolling panel assembly.

1. Disconnect the harness from connector CN867 on the main board.
2. Disconnect the card wire from connector CN879 on the main board (Before pulling out the card wire, stand the part **d** of CN879 as shown in Fig.15).
3. Remove the two screws **N** attaching the main board.

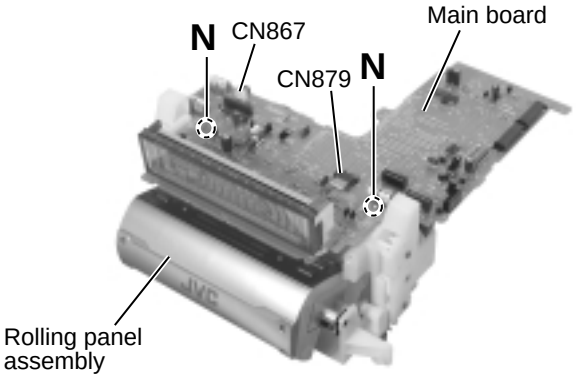

Fig.14

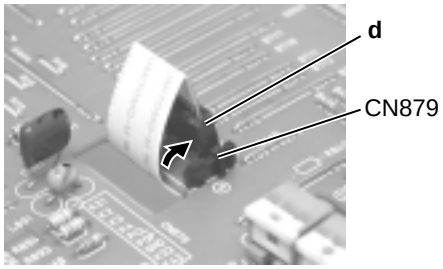

Fig.15

■Removing the cassette mechanism assembly (See Fig.16)

- Prior to performing the following procedure, remove the front panel assembly.

1. Disconnect the card wire from connector CN306 on the cassette mechanism board.
2. Remove the eight screws **O** and **P** attaching the cassette mechanism assembly.
3. Pull out the cassette mechanism assembly toward you.

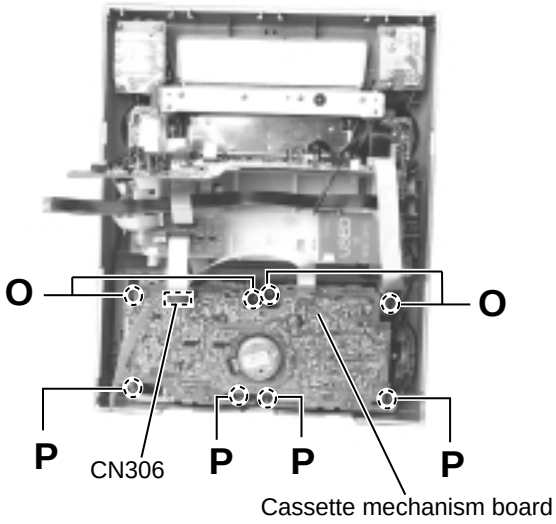

Fig.16

■Removing the boards in the front panel assembly (See Fig.17 and 18)

- Prior to performing the following procedure, remove the front panel assembly, the microphone terminal board assembly and the rolling panel assembly.

— Function board1 (See Fig.17) —

1. Remove the two screws **Q** attaching the function board 1.

— Function board2 (See Fig.17) —

1. Remove the two screws **R** attaching the function board 2.

— Bass-level regulator board (See Fig.18) —

1. Pull out the bass-level knob on the front side of the front panel assembly and remove the nut attaching the bass-level regulator board.

2. Release the two joints **e**. Unsolder FW951 on the bass-level regulator board and disconnect the harness connected to the power switch board.

— Main volume & headphone board (See Fig.18) —

1. Pull out the volume knob on the front side of the front panel assembly and remove the nut attaching the main volume & headphone board.

2. Remove the two screws **S** attaching the main volume & headphone board on the back of the front panel assembly and release the two joints **f**.

3. Remove the screw **P** attaching the earth wire extending from the main volume & headphone board.

4. Unsolder FW850 on the main volume & headphone board and disconnect the harness connected to the eject switch board.

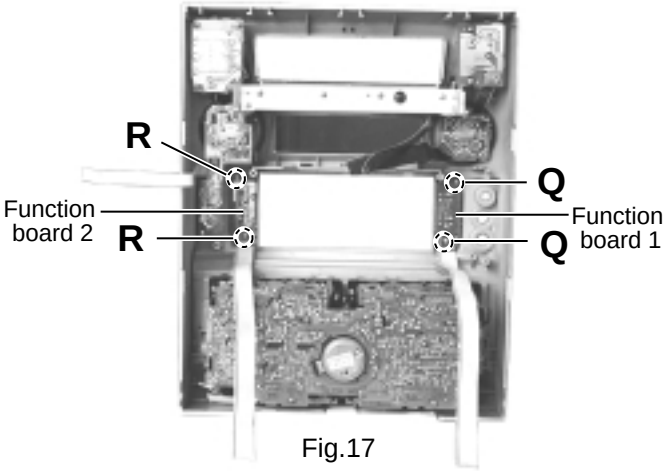

Fig.17

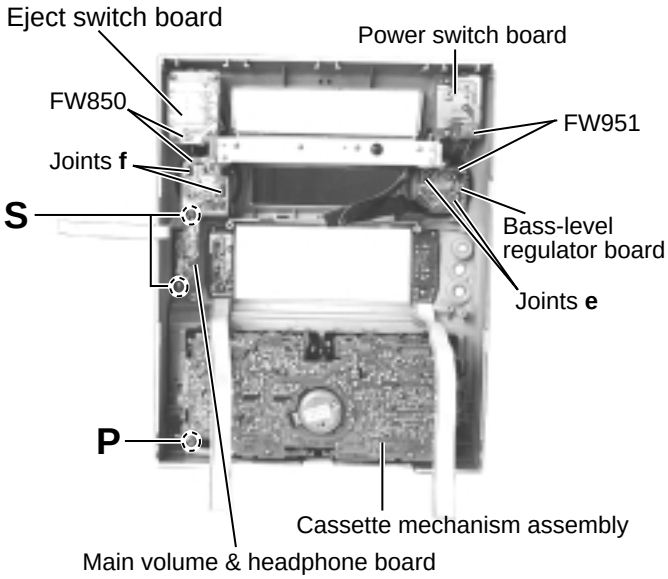

Fig.18

— Power switch board (See Fig.19) —

1. Remove the two screws **T** attaching the power switch board. Unsolder FW951 on the power switch board and disconnect the harness extending to the bass-level regulator board.

— Eject switch board (See Fig.19) —

1. Remove the four screws **U** attaching the eject switch board. Unsolder FW850 on the eject switch board and disconnect the harness extending to the main volume & headphone board.

— Remote control port board (See Fig.19) —

1. Remove the screw **V** attaching the remote control port board.

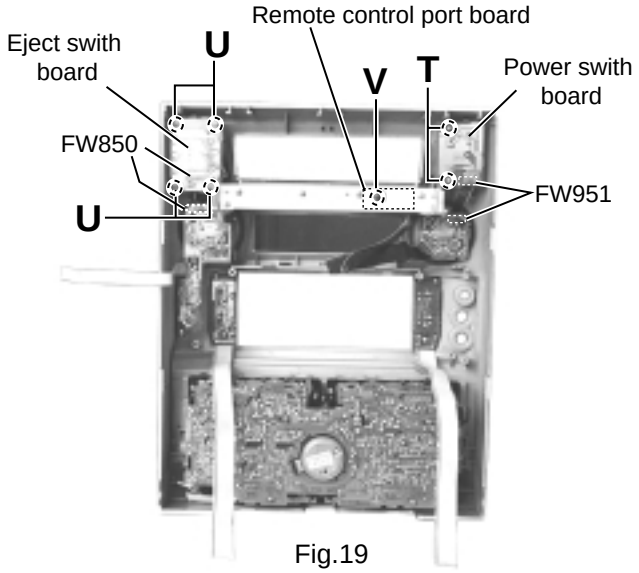

Fig.19

■ Removing the relay board and fixing board (See Fig.20)

- Prior to performing the following procedure, remove the metal cover,CD changer mechanism assembly and the front panel assembly.
- There is no need to remove the front panel assembly.

1. Disconnect the harness from connector CN900, CN901, CN905 and CN906 on the relay board on the back of the rolling panel assembly.
2. Remove the screw **W** attaching the relay board. Remove the relay board from the groove **g**.
3. Remove the screw **X** attaching the fixing board and remove the fixing board from the groove **h**.

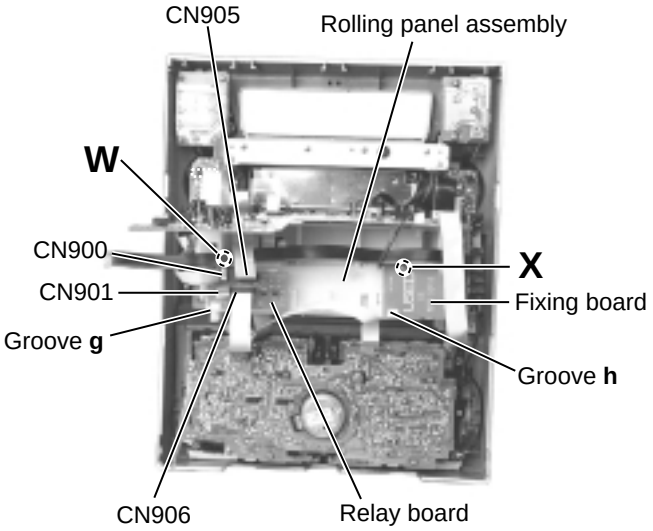

Fig.20

<Rear panel assembly>

■Removing the tuner board (See Fig.21 and 22)

- Prior to performing the following procedure, remove the metal cover and CD changer mechanism assembly.

1. Remove the two plastic rivets attaching the joint board, and remove the joint board.
2. Disconnect the card wire from connector CN1 on the tuner board.
3. Remove the two screws **Y** attaching the tuner board on the back of the body.

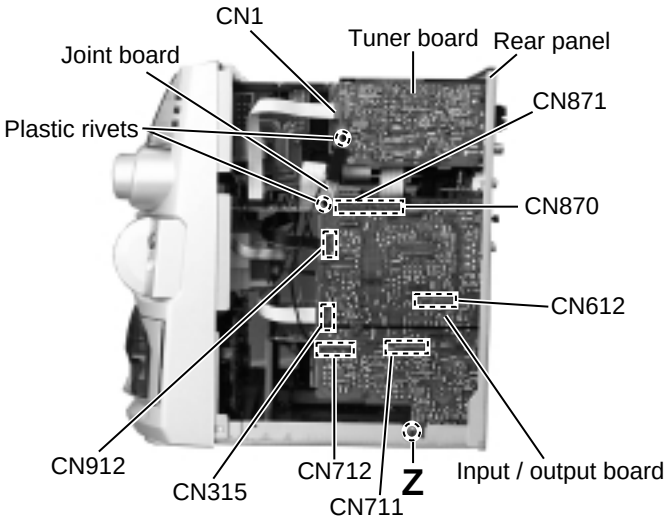

Fig.21

■Removing the input / output board (See Fig.21 and 22)

- Prior to performing the following procedure, remove the metal cover and CD changer mechanism assembly.

1. Remove the two plastic rivets attaching the joint board, and remove the joint board.
2. Disconnect the card wire from connector CN315 on the input / output board.
3. Disconnect the harness from connector CN912 on the input / output board.
4. Remove the screw **Z** attaching the input / output board on the lower side of the body.
5. Disconnect connector CN612, CN870, CN871, CN711 and CN712 on the input / output board and pulling out them outward. Remove the input / output board from the body.

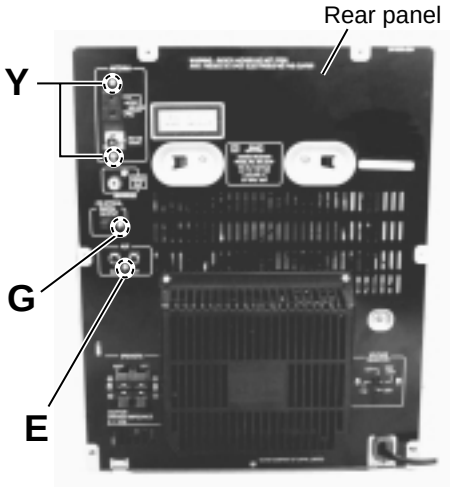

Fig.22

■Removing the rear cover / rear panel (See Fig.23 to 26)

- Prior to performing the following procedure, remove the metal cover and the CD changer mechanism assembly.
- There is no need to remove the front panel assembly.

1. Remove the two screws **A** attaching the rear cover on the back of the body.
2. Remove the screw **E** attaching the AUX terminal board and the rear panel on the back of the body.
3. Remove the screw **G** attaching the digital output terminal.
4. Remove the seven screws **B** attaching the heat sink and the pre-amplifier board to the rear panel on the back of the body.
5. Remove the two screws **C** attaching the voltage selector on the back at the body.
6. Remove the three screws **D** attaching the antenna terminal and the rear panel to the chassis base on the back of the body.
7. Release the two joints **i** and **j** on the rear panel bottom using a screwdriver, and detach the rear panel backward.

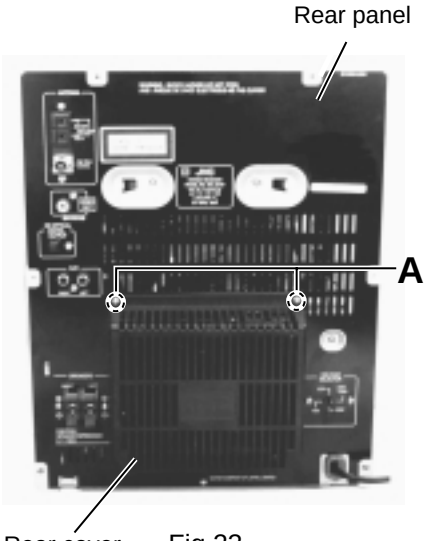

Fig.23

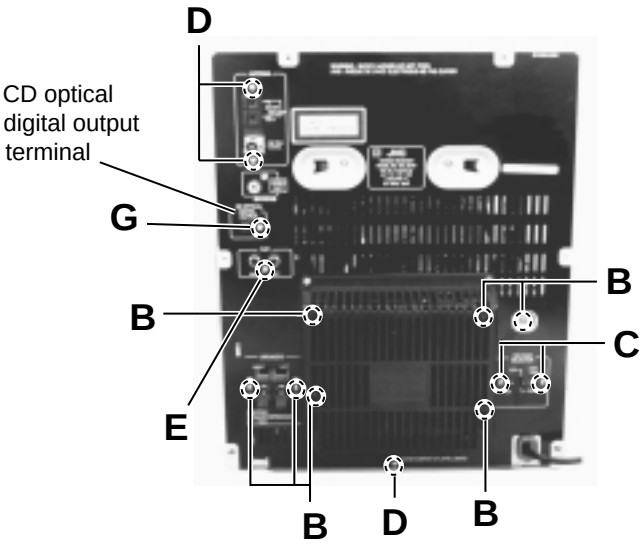

Fig.24

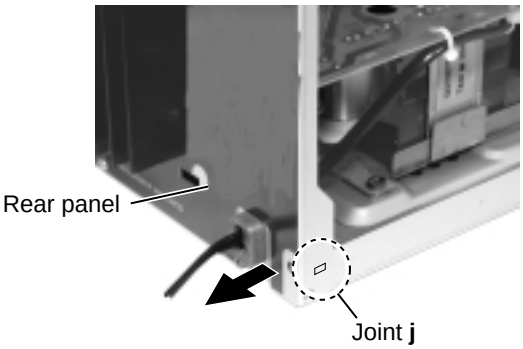

Fig.26

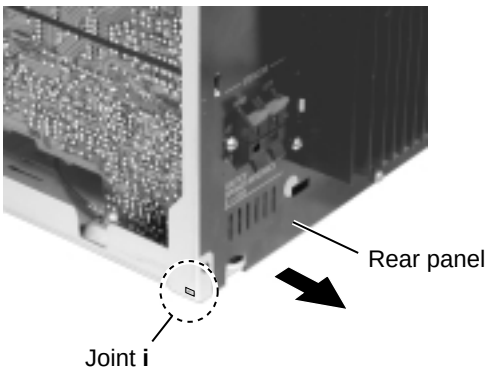

Fig.25

■Removing the pre-amplifier board / heat sink (See Fig.27 to 29)

- Prior to performing the following procedure, remove the metal cover, the CD changer mechanism assembly and the rear cover / rear panel.
- There is no need to remove the front panel assembly.

1. Remove the input / output board (Refer to Fig.21 and 22).
2. Disconnect the harness from connector CN713 on the pre-amplifier board.
3. Remove the two screws **E** attaching the heat sink to the power & main amplifier board on the back of the body.
4. Remove the two screws **F** attaching the pre-amplifier board to the heat sink and detach them with the heat sink bracket.

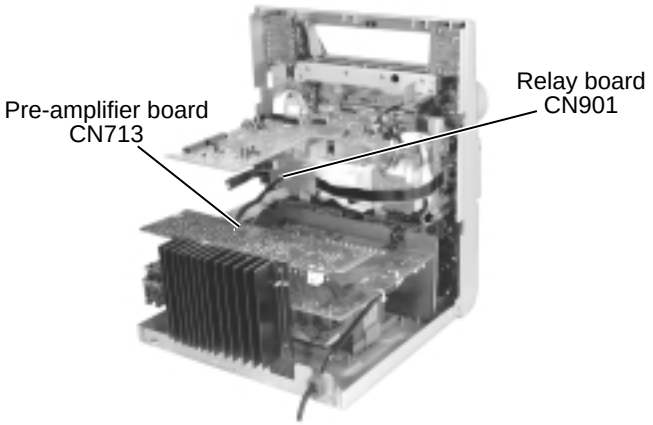

Fig.27

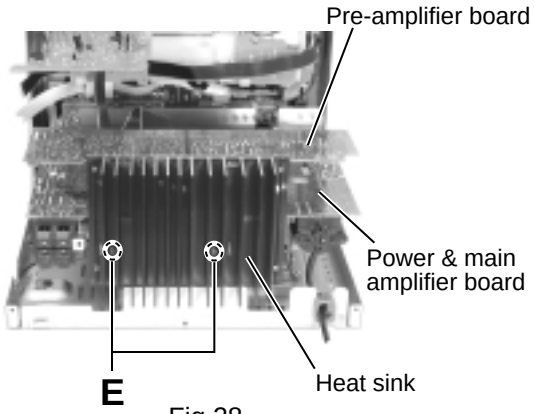

Fig.28

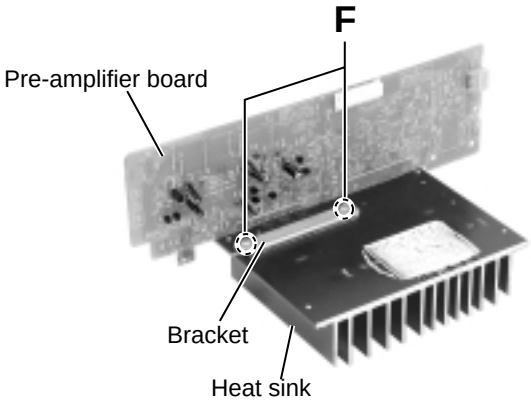

Fig.29

■Removing the power & main amplifier board (See Fig.30 and 31)

- Prior to performing the following procedure, remove the metal cover, the CD changer mechanism assembly, the front panel assembly, the rear cover / rear panel, the tuner board, the input / output board and pre-amplifier board.

1. Remove the four screws **G** attaching the transf. on the power & main amplifier board through the upper side slots.
2. Remove the two plastic rivets fixing the power & main amplifier board.
3. Remove the cord stopper by pushing it upward.
4. Cut off the bands **k** and **l** fixing the power cord and unsolder the soldered part on the power & main amplifier board.

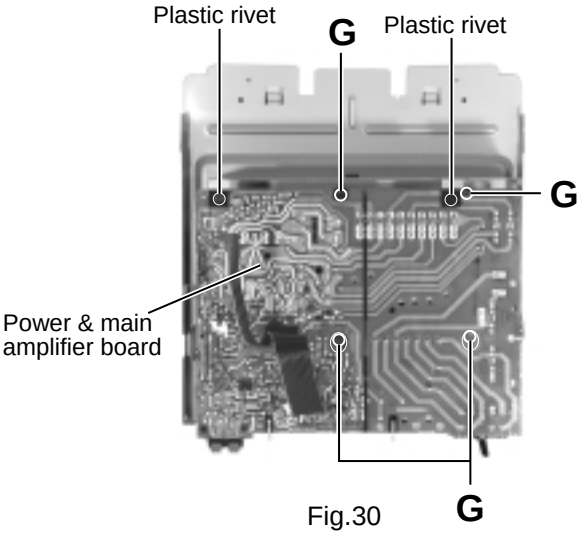

Fig.30

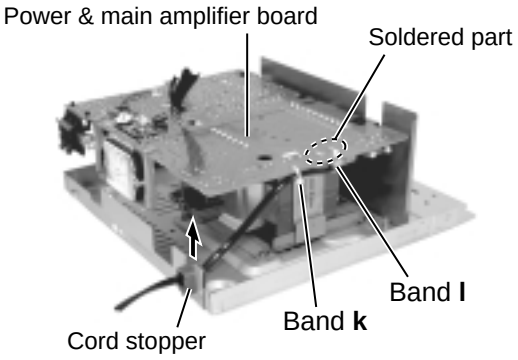

Fig.31

<Rolling panel assembly>

■Removing the multi-control assembly (See Fig.32 to 34)

- Prior to performing the following procedure, remove the metal cover, CD changer mechanism assembly, the front panel assembly, the microphone terminal board assembly, the rolling panel assembly and the main board.

1. Remove the two screws **H** attaching the multi-control assembly on both sides.
2. Remove the multi-control assembly outward while pushing, pull the right and left hooks fixing multi-control assembly outward respectively.

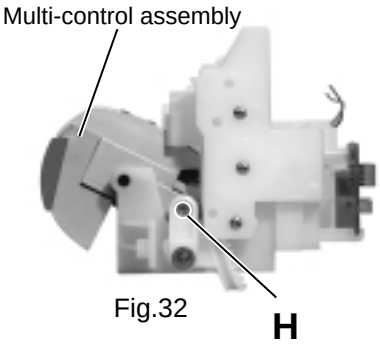

Fig.32

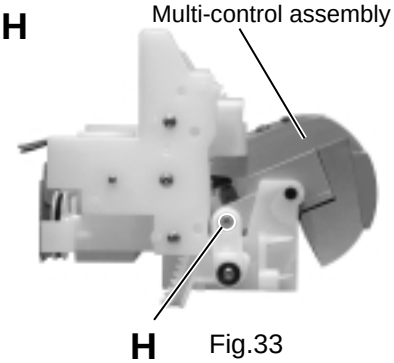

Fig.33

■Removing the multi-control board (See Fig.35 to 37)

- Prior to performing the following procedure, remove the multi-control assembly.

1. Remove the four screws **I** attaching the cover and the bracket.
2. Pull out the right and left panel holders outward respectivery by releasing the tabs **m** outward.
3. Remove the cover and the bracket.
4. Remove the four screws **J** attaching the multi-control board.

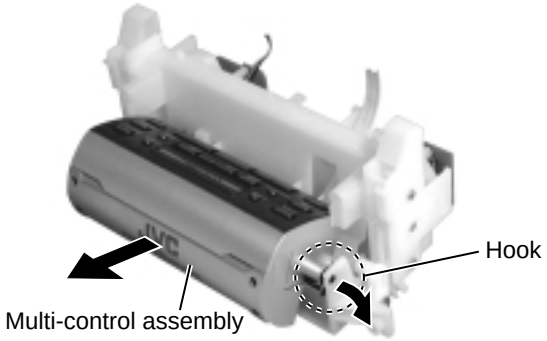

Fig.34

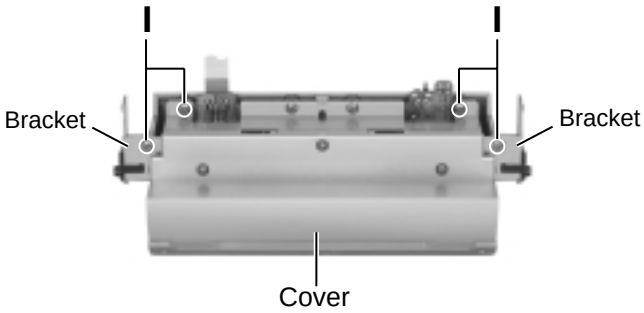

Fig.35

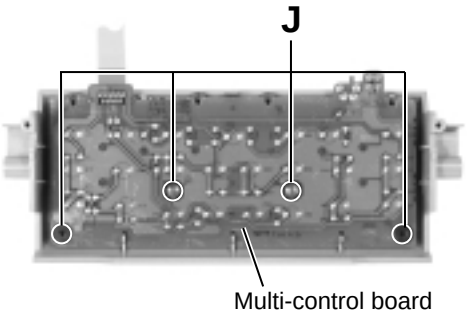

Fig.37

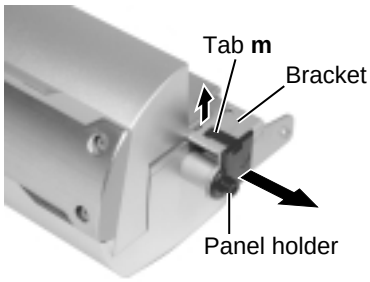

Fig.36

■Removing the drive motor assembly (See Fig.38 to 40)

- Prior to performing the following procedure, remove the metal cover, CD changer mechanism assembly, the front panel assembly, the microphone terminal board assembly, the rolling panel assembly and the main board.

1. Remove the relay board / fixing board (Refer to Fig.20).
2. Remove the two screws **K** attaching the motor bracket and remove the motor lead staple **n**.
3. Remove the two screws **L** attaching the shaft bracket.
4. Remove the motor belt.
5. Remove the three screws **M** attaching the side bracket.
6. Remove the shaft assembly from the rolling panel assembly by lift up the shaft assembly upward.
7. Remove the drive motor upward.

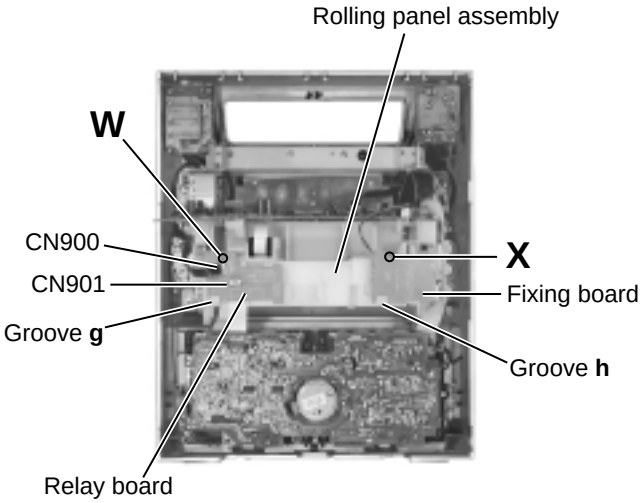

Fig.20

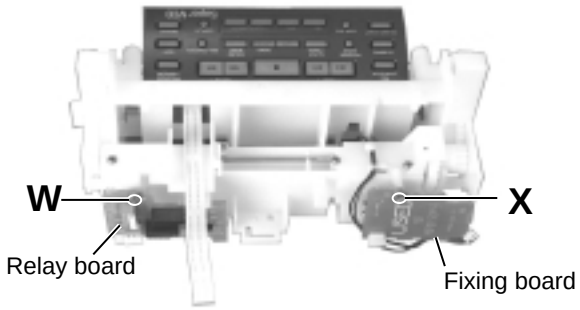

Fig.38

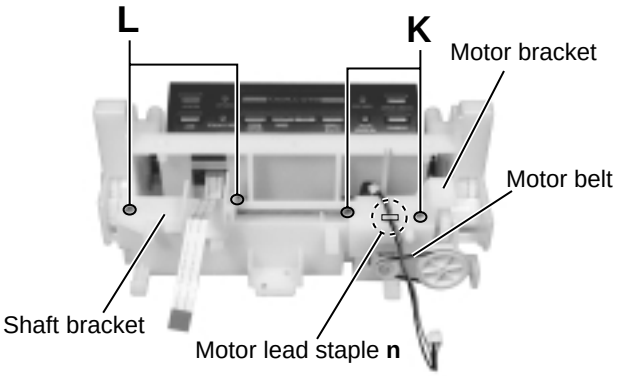

Fig.39

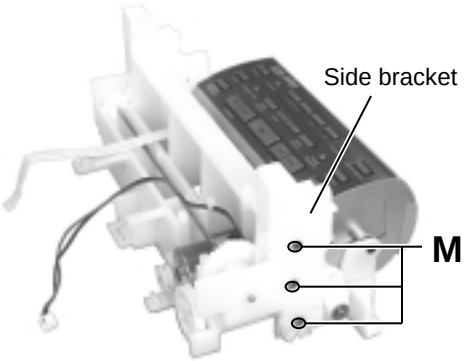

Fig.40

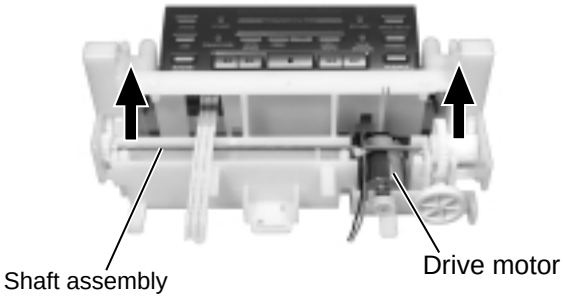

Fig.39

■Removing the super VCD control board (See Fig.41)

- Prior to performing the following procedure, remove the metal cover and the CD changer mechanism assembly.

1. Disconnect the card wire from connector CN101 and CN102 on the super VCD control board.

2. Remove the two plastic rivets attaching the super VCD control board.

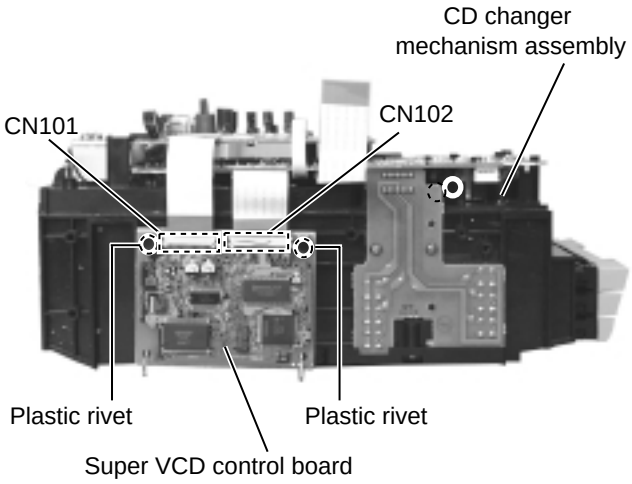

Fig.42

≪CD Changer Mechanism Type:VC3 Section≫

■ Removing the CD Servo control board (See Fig.1)

1. Remove the metal cover.
2. Remove the CD changer mechanism assembly.
3. From bottom side the CD changer mechanism assembly, remove the two screws **A** retaining the CD servo control board.
4. Absorb the four soldered positions "a" of the right and left motors with a soldering absorber.
5. Pull out the earth wire on the CD changer mechanism assembly.
6. The two screws **B** is removed and C.B.holder is detached.
7. Disconnect the connector CN854 on the CD servo control board.
8. Disconnect the card wire CN601 and the connector CN801 on the CD servo control board.

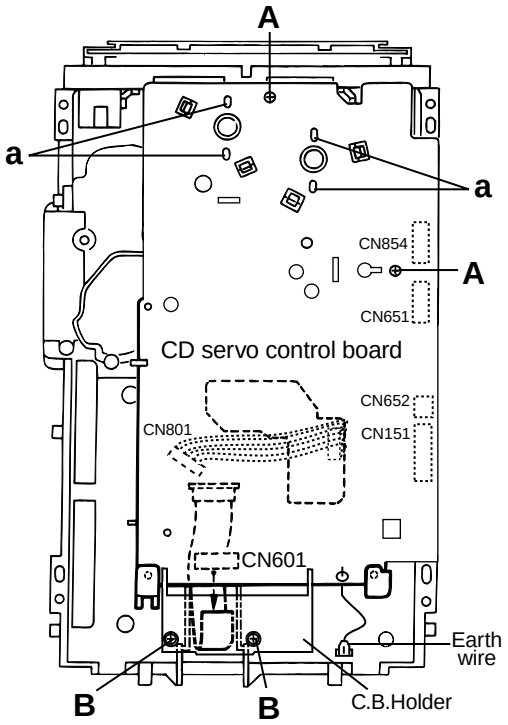

Fig.1

■ Removing the CD tray assembly (See Fig.2~4)

1. Remove the front panel assembly.
2. Remove the CD changer mechanism assembly.
3. Remove the CD Servo control board.
4. Remove the screw **C** retaining the lod stopper (Only ver.J/C).
5. From the T.bracket section "b" and clamper base section "c" , remove both of the edges fixing the rod(See Fig.2 and 3).
6. Remove the screw **D** retaining the disc stopper (See Fig.3).
7. Remove the three screws **E** retaining the T.bracket (See Fig.3).
8. Remove the screw **F** retaining the clamper assembly (See Fig.3).
9. From the left side face of the chassis assembly, remove the one screw **G** retaining both of the return spring and lock lever(See Fig. 4).
10. By removing the pawl at the section "d" fixing the return spring, dismount the return spring(See Fig.4).
11. Remove the three lock levers(See Fig.4).

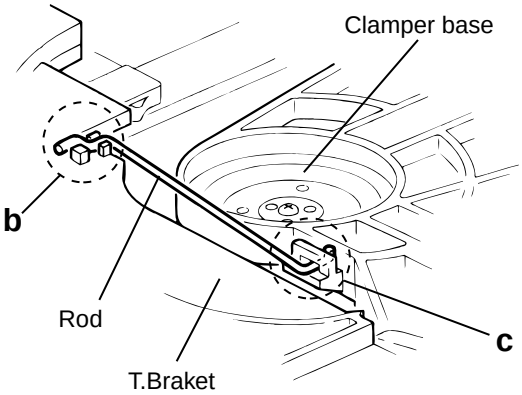

Fig.2

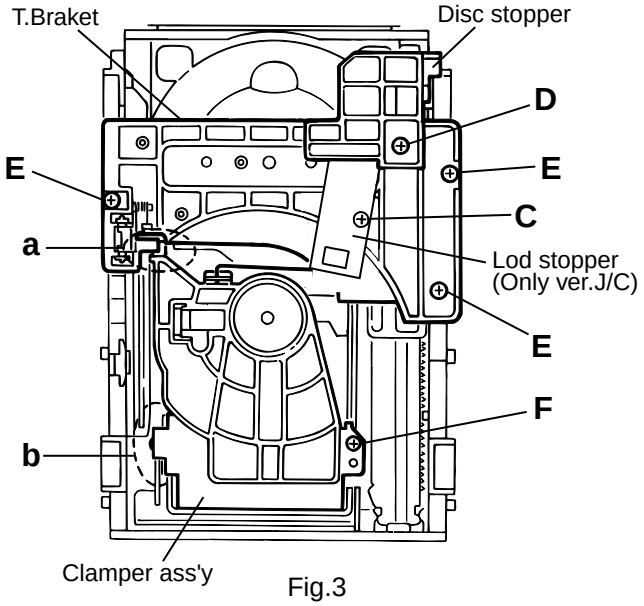

Fig.3

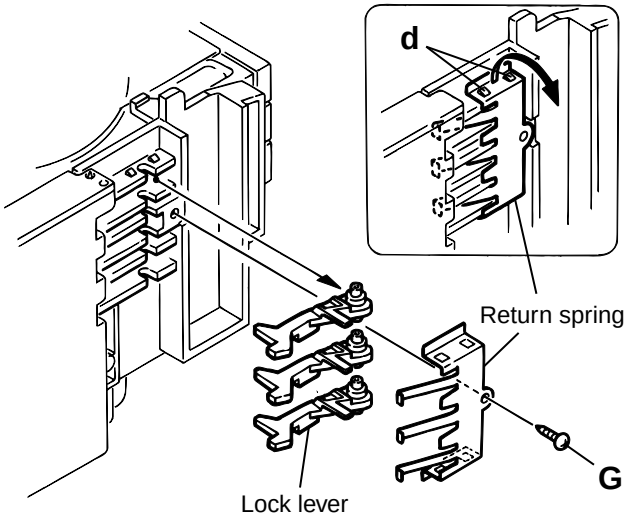

Fig.4

11. Check whether the lifter unit stopper has been caught into the hole at the section "e" of CD tray assembly as shown in Fig.5.
12. Make sure that the driver unit elevator is positioned as shown in Fig.6 from to the second or fifth hole on the left side face of the CD changer mechanism assembly.

[Caution] In case the driver unit elevator is not at above position, set the elevator to the position as shown in Fig.7 by manually turning the pulley gear as shown in Fig.8.

13. Manually turn the motor pulley in the clockwise direction until the lifter unit stopper is lowered from the section "e" of CD tray assembly(See Fig.8).
14. Pull out all of the three stages of CD tray assembly in the arrow direction "f" until these stages stop (See Fig.6).
15. At the position where the CD tray assembly has stopped, pull out the CD tray assembly while pressing the two pawls "g and g' " on the back side of CD tray assembly(See Fig.9). In this case, it is easy to pull out the assembly when it is pulled out first from the stage CD tray assembly.

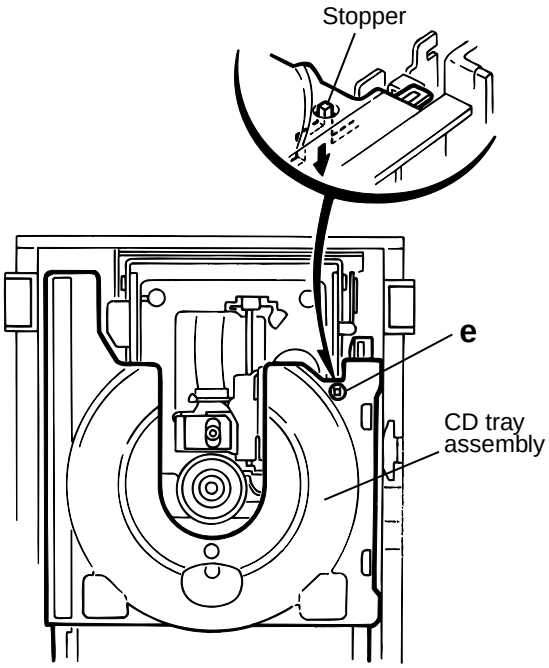

Fig.5

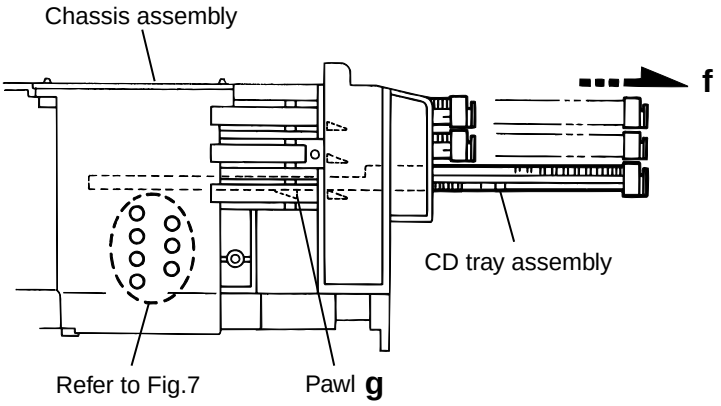

Fig.6

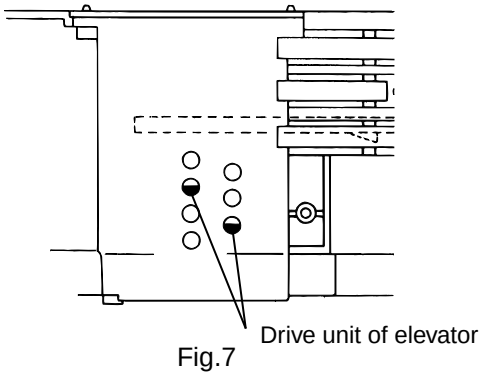

Fig.7

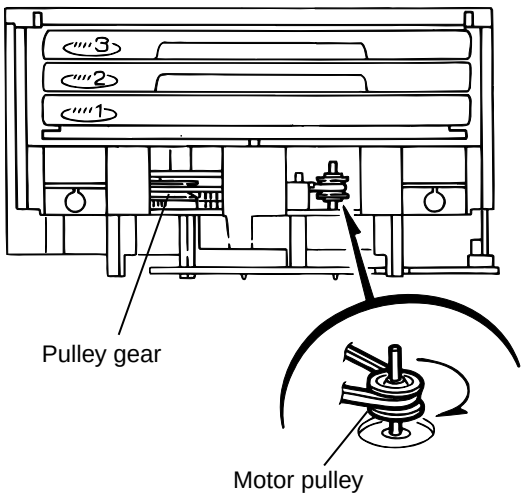

Fig.8

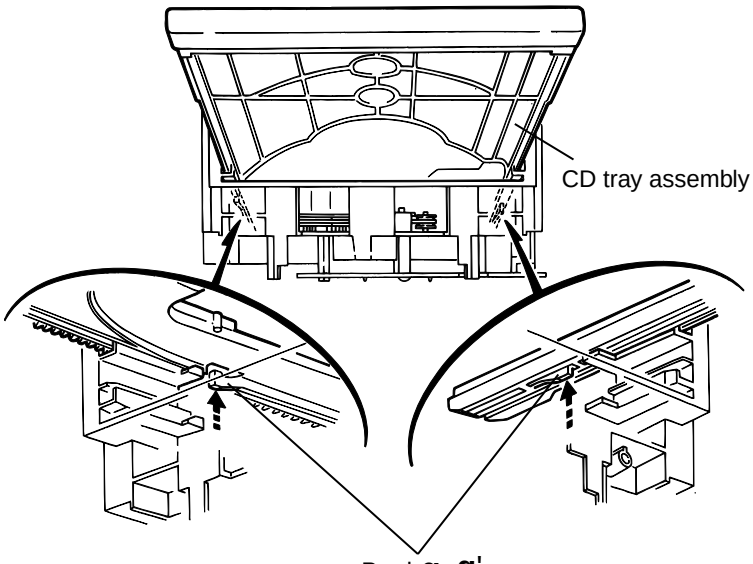

Fig.9

■ Removing the CD loading mechanism assembly(See Fig.10)

1. While turning the cams R1 and R2 assembly in the arrow direction "h" ,align the shaft "i" of the CD loading mechanism assembly to the position shown in Fig.10.
2. Remove the four screws **H** retaining the CD loading mechanism assembly.

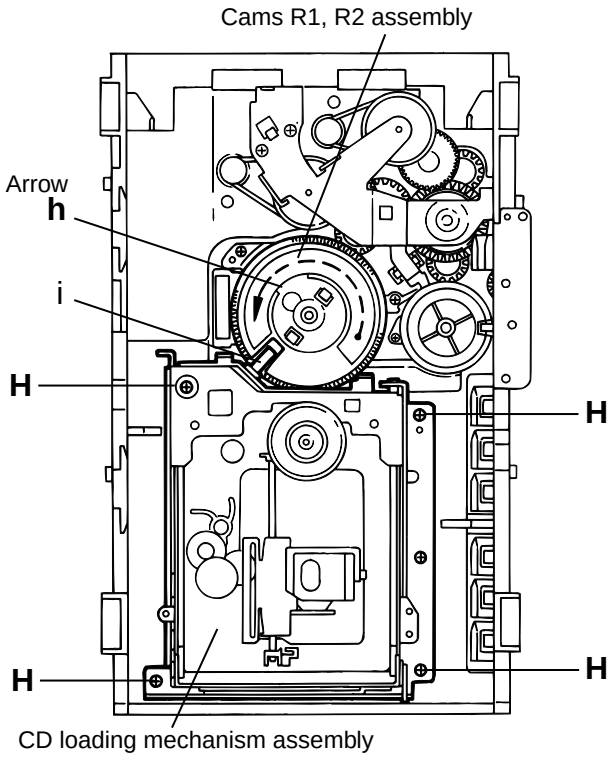

Fig.10

■ Removing the CD traverse mechanism (See Fig.11 and 12)

1. For dismounting only the CD traverse mechanism without removing the CD loading mechanism assembly, align the shaft "j" of the CD loading mechanism assembly to the position shown Fig.11 while turning the cam R1 and R2 assembly in the arrow direction "k" .
2. By raising the CD loading mechanism assembly in the arrow direction "l", remove the assembly from the lifter unit

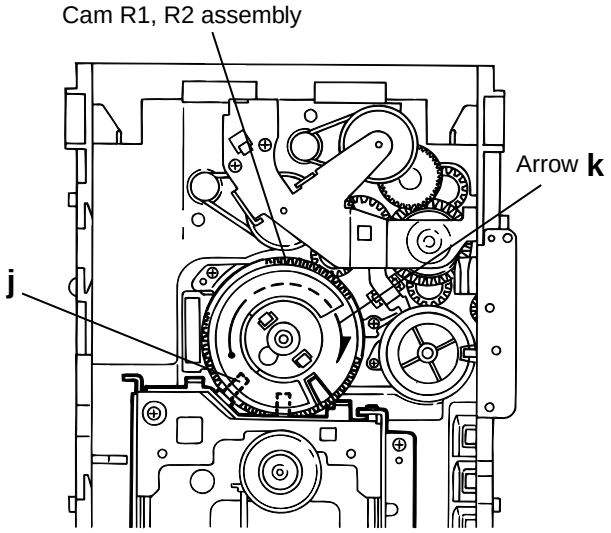

Fig.11

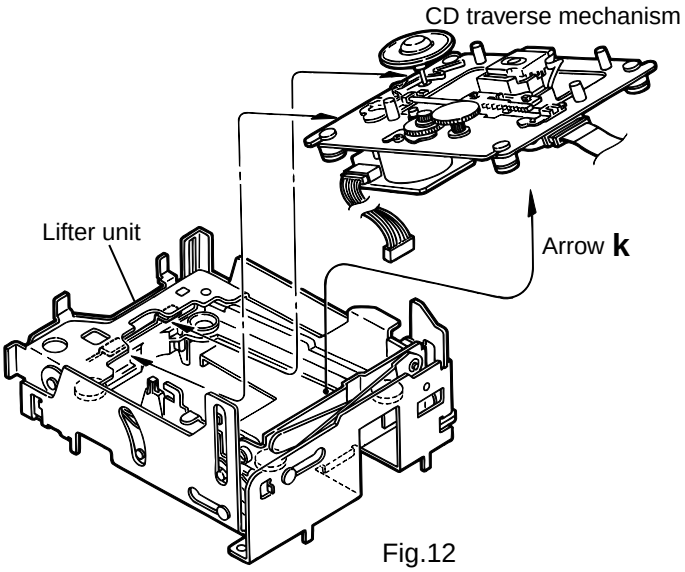

Fig.12

■ Removing the CD pick unit (See Fig.13)

1. Move the cam gear in the arrow direction "m" . Then, the CD pickup unit will be moved in the arrow direction "n" .
2. According to the above step, shift the CD pickup unit to the center position.
3. While pressing the stopper retaining the shaft in the arrow direction "o" , pull out the shaft in the arrow direction "p".
4. After dismounting the shaft from the CD pickup unit, remove the CD pickup unit

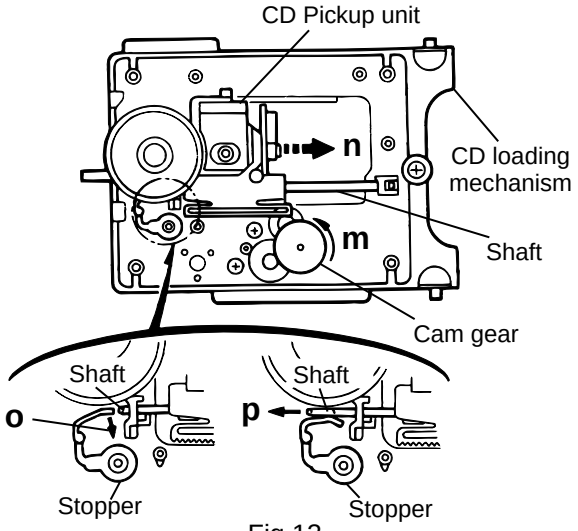

Fig.13

■ Removing the cam unit (See Fig.14 ~17)

1. Remove the CD loading mechanism assembly.
2. While turning the cam gear "q", align the pawl "r" position of the drive unit to the notch position(Fig.16) on the cam gear "q".
3. Pull out the drive unit and cylinder gear(See Fig.17).
4. While turning the cam gear "q", align the pawl "s" position of the select lever to the notch position(Fig.18) on the cam gear "q".
5. Remove the four screws **J** retaining the cam unit(cam gear "q" and cams R1/R2 assembly)(See Fig.18).

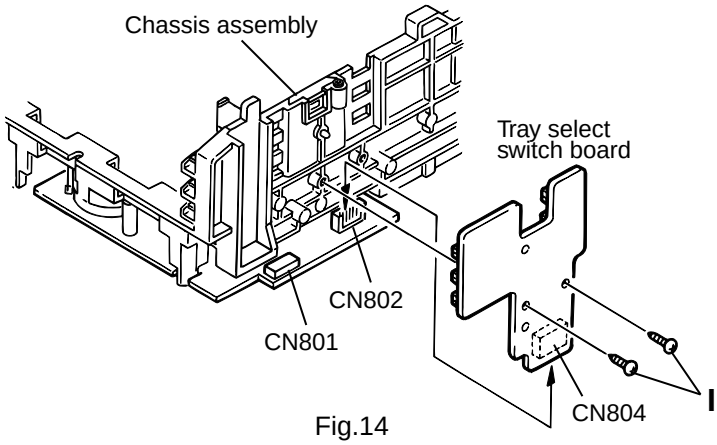

Fig.14

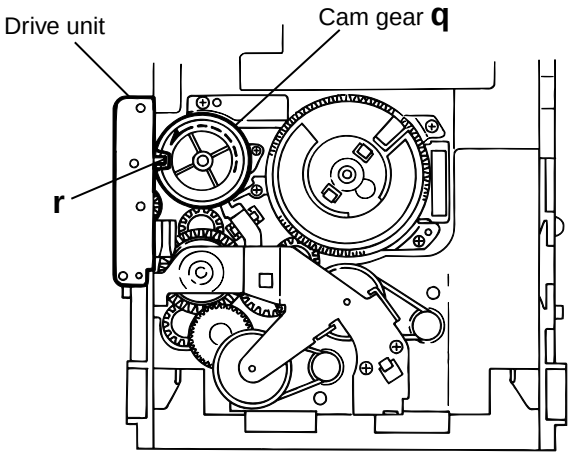

Fig.15

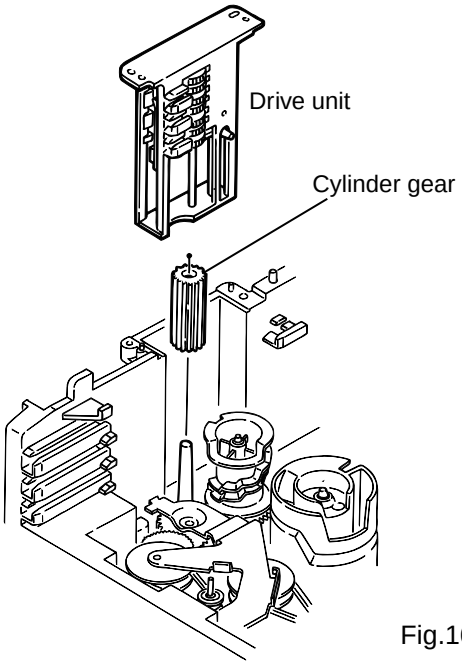

Fig.16

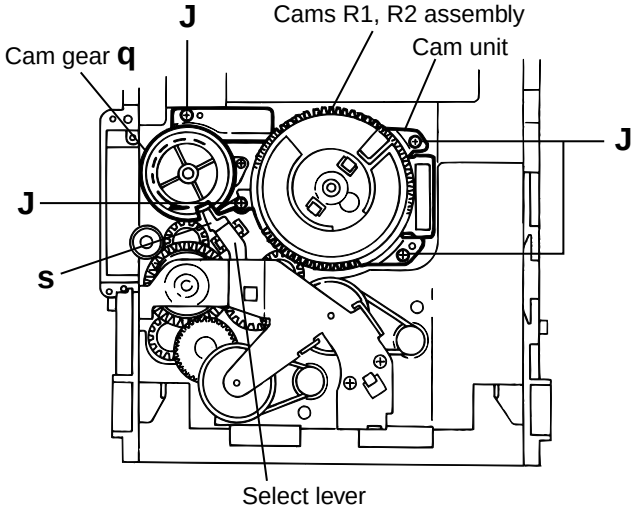

Fig.17

■ Removing the actuator motor and belt (See Fig.18~21)

1. Remove the two screws **K** retaining the gear bracket (See Fig.19).
2. While pressing the pawl "t" fixing the gear bracket in the arrow direction, remove the gear bracket (See Fig.19).
3. From the notch "u section" on the chassis assembly fixing the edge of gear bracket, remove and take out the gear bracket(See Fig. 20).
4. Remove the belts respectively from the right and left actuator motor pulleys and pulley gears(See Fig. 19).
5. After turning over the chassis assembly, remove the actuator motor while spreading the four pawls "v" fixing the right and left actuator motors in the arrow direction(See Fig. 21).

[Note] When the chassis assembly is turned over under the conditions wherein the gear bracket and belt have been removed, then the pulley gear as well as the gear, etc. constituting the gear unit can possibly be separated to pieces. In such a case, assemble these parts by referring to the assembly and configuration diagram in Fig. 22.

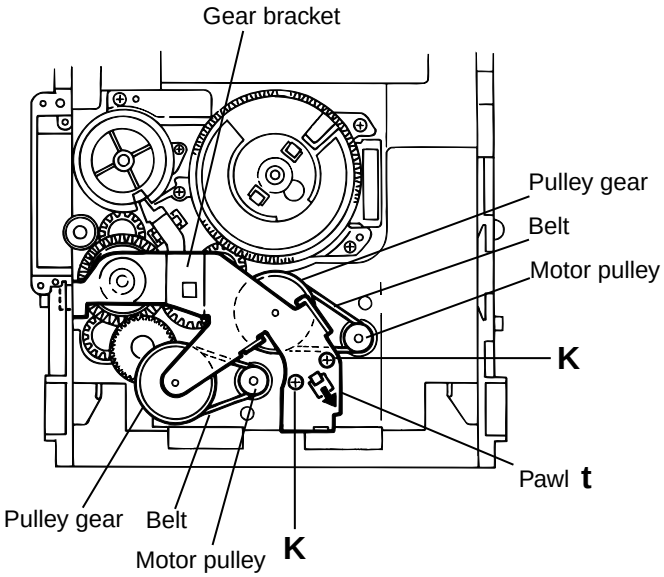

Fig.18

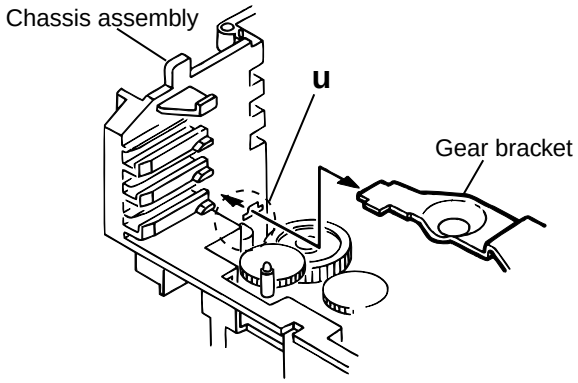

Fig.19

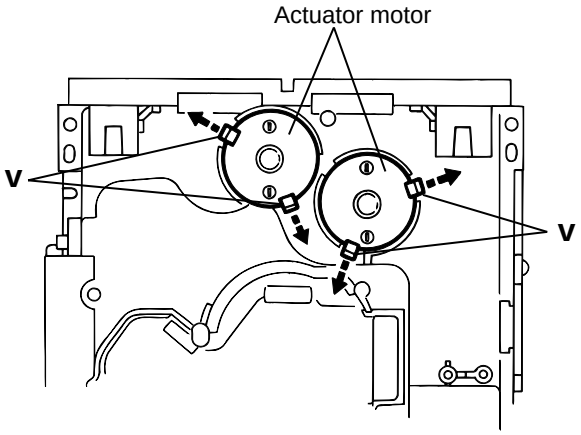

Fig.20

Assembly and Configuration Diagram

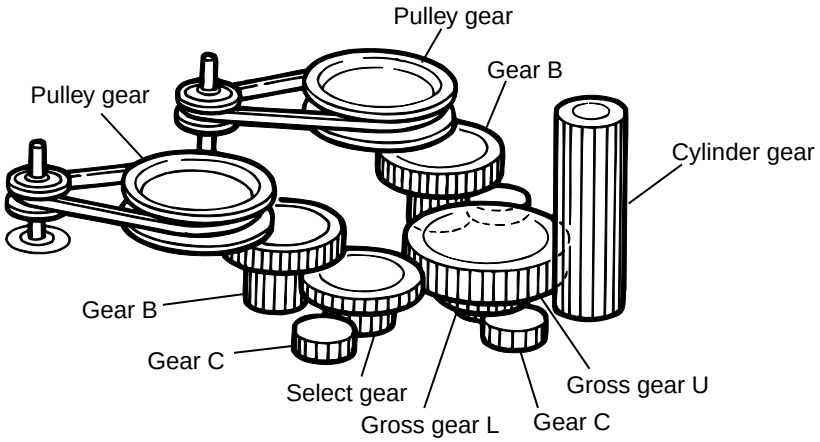

Fig.21

■ Removing the cams R1/R2 assembly and cam gear q(See Fig.22)

1. Remove the slit washer fixing the cams R1 and R2 assembly.
2. By removing the two pawls "w" fixing the cam R1, separate R2 from R1.
3. Remove the slit washer fixing the cam gear "q".
4. Pull out the cam gear "q" from the C.G. base assembly.

■ Removing the C.G. base assembly (See Fig.22 and 23)

Remove the three screws **L** retaining the C.G. base assembly.

[Caution] To reassemble the cylinder gear, etc.with the cam unit (cam gear and cans R1/R2 assembly), gear unit and drive unit, align the position of the pawl "x" on the drive unit to that of the notch on the cam gear "q". Then, make sure that the gear unit is engaged by turning the cam gear "q" (See Fig. 24).

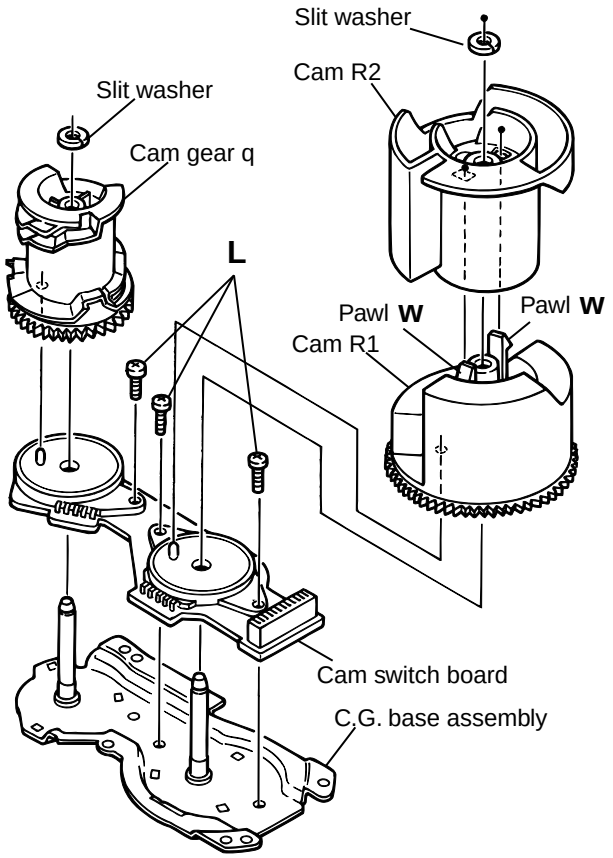

Fig.22

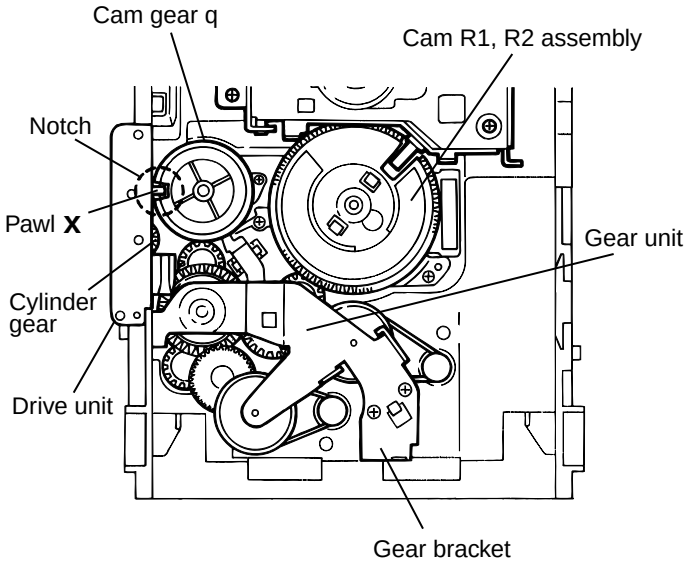

Fig.23

< Cassette mechanism section >

■ Removing the playback,recording and eraser heads (See Fig.1~3)

1. While shifting the trigger arms seen on the right side of the head mount in the arrow direction,turn the flywheel R in counterclockwise direction until the head mount has gone out with a click (See Fig. 1).
2. When the flywheel R is rotated in counterclockwise direction, the playback head will be turned in counterclockwise direction from the position in Fig.2 to that in Fig.3.
3. At this position, disconnect the flexible P.C.board (outgoing from the playback head) from the connector CN301 on the head amp. and mechanism control P.C. board.
4. After dismounting the FPC holder,remove the flexible P.C.board.
5. Remove the flexible P.C.board from the chassis base.
6. Remove the spring "a" from behind the playback head.
7. Loosen the reversing azimuth screw retaining the playback head.
8. Take out the playback head from the front of the head mount.
9. The recording and eraser heads should also be removed similarly according to Steps 1~8 above.

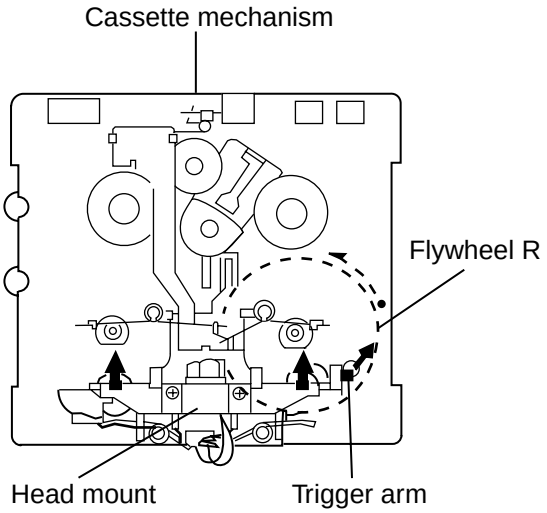

Fig.1 (Mechanism A side)

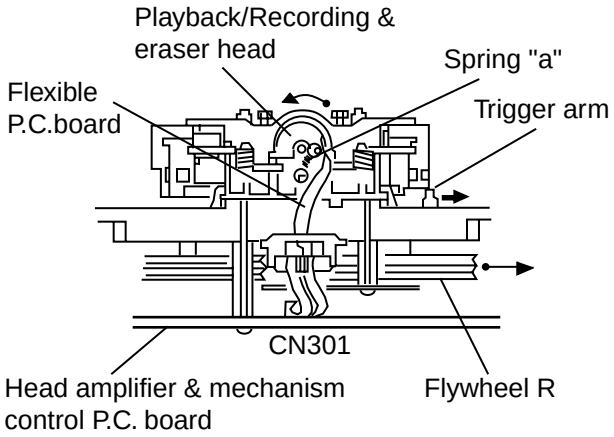

Fig.2 (Mechanism A side)

● Reassembling the playback, recording and eraser heads (See Fig.2,3)

1. Reassemble the playback head from the front of the head mount to the position as shown in Fig.3.
2. Fix the reversing azimuth screw.
3. Set the spring a from behind the playback head.
4. Attach the flexible P.C.board to the chassis base, and fix it with the FPC holder as shown in Fig.3.
5. The recording and eraser heads should also be reassembled similarly according to Steps 1~4 above.

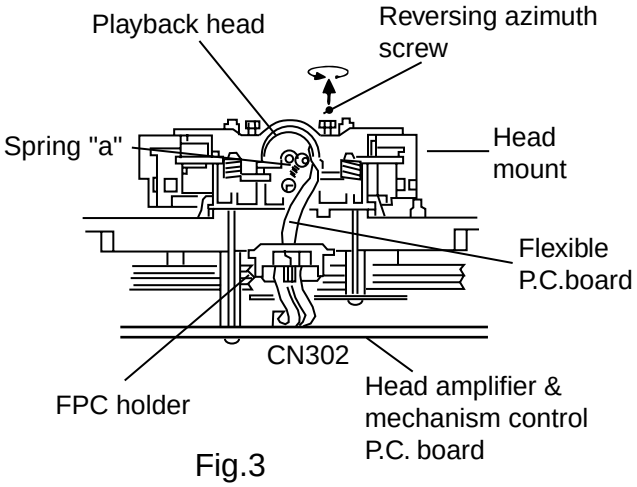

Fig.3

(Mechanism B side)

■ Removing the head amp.and mechanism control P.C.board (See Fig. 4)

1.Remove the cassette mechanism assembly.
2.After turning over the cassette mechanism assembly,remove the five screws "A" retaining the head amp. and mechanism control P.C. board
3.Disconnect the connectors CN303 and CN304 on the P.C.Board and the connectors CN1 on both the right and left side reel pulse P.C.Boards.
4.When necessary, remove the 4pin parallel wire soldered to the main motor

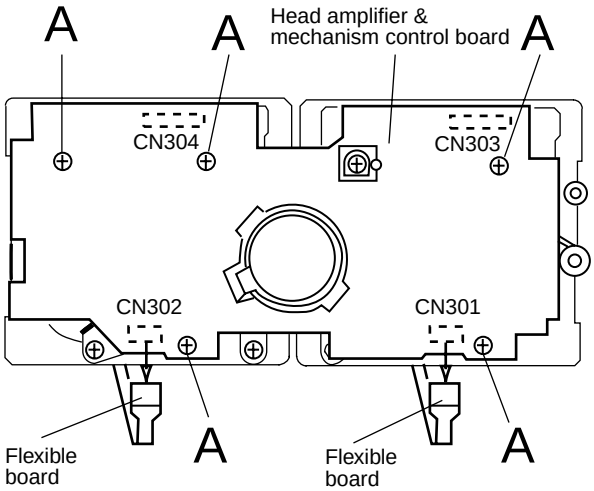

Fig.4

■ Removing the capstan motor assembly

1.Remove the six screws "B" retaining capstan motor assembly (See Fig. 5).
2.While raising the capstan motor, remove the capstan belts A and B respectively from the motor pulley (See Fig. 6).

Caution 1: Be sure to handle the capstan belts so carefully that these belts will not be stained by grease and other foreign matter. Moreover, these belts should be hand while referring to the capstan belt hanging method.

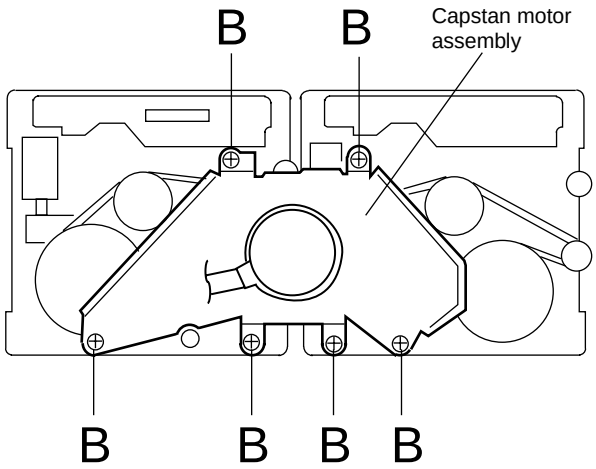

Fig.5

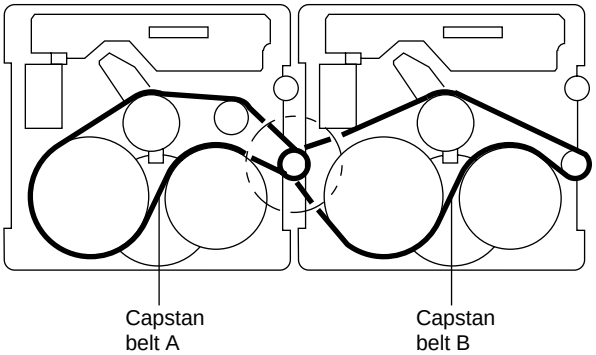

Fig.7

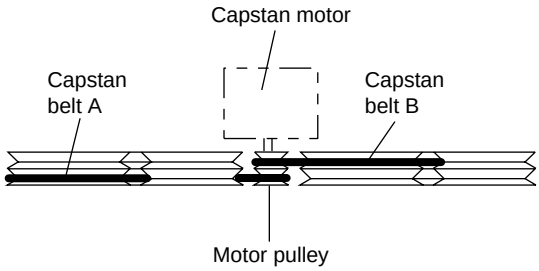

Fig.6

■ Removing the capstan motor (See Fig. 8)

From the joint bracket, remove the two screws "C" retaining the capstan motor.

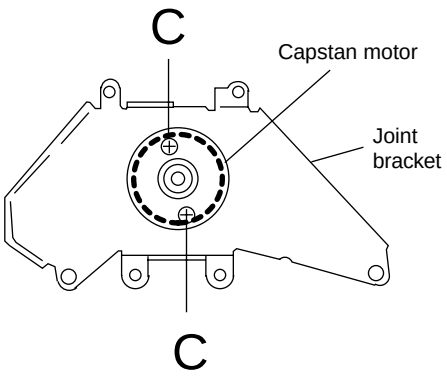

Fig.8

■ Removing the flywheel (See Fig. 9,10)

1. Remove the head amp. and mechanism control P.C.Board.
2. Remove the capstan motor assembly.
3. After turning over the cassette mechanism, remove the slit washers "a" and "b" fixing the capstan shafts R and L, and pull out the flywheels R and L respectively from behind the cassette mechanism.

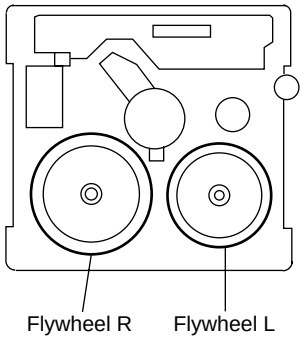

Fig.10

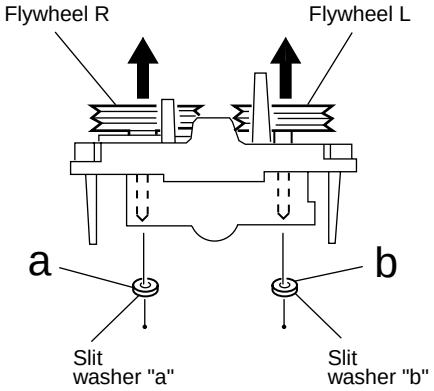

Fig.9

■ Removing the reel pulse P.C.board and solenoid (See Fig. 11)

1. Remove the five pawls (c,d,e,f,g) retaining the reel pulse P.C.Board.
2. From the surface of the reel pulse P.C.Board parts, remove the two pawls "h" and "i" retaining the solenoid.

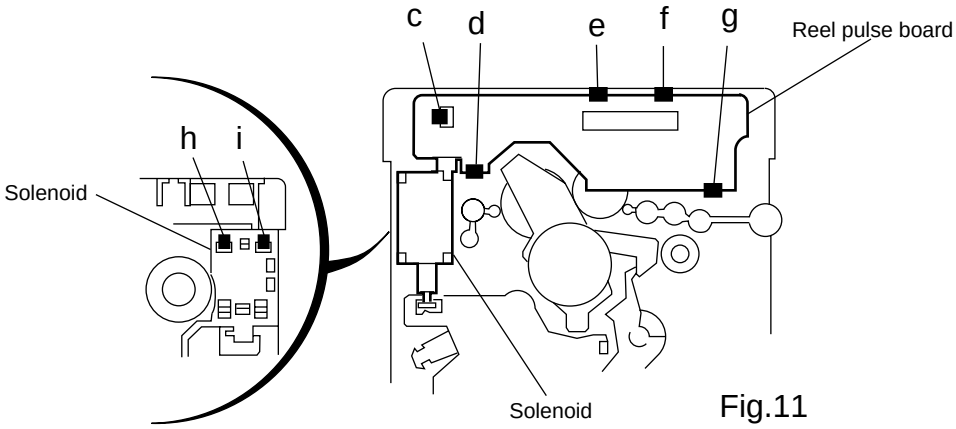

Fig.11

Adjustment method

Measurement instruments required for a djustment

1. Low frequency oscillator,
   This oscillator should have a capacity to output 0dBs to 600ohm at an oscillation frequency of 50Hz-20kHz.
2. Attenuator impedance : 600ohm
3. Electronic voltmeter
4. Frequency counter
5. Wow flutter meter
6. Test tape
   VTT712 : For Tape speed and wow flutter (3kHz)
   VTT724 : For Reference level (1kHz)
   TMT7036 : For Head angle(10kHz),Play back frequency characteristics(1kHz),and dubbing frequency characteristics(63,1,10kHz)
   Because of frequency-mixed tape with 63,1k,10k and 14kHz(250nWb/m -24dB).
   Use this tape together with a filter.
7. Blank tape
   TAPE Ⅰ: AC-225, TAPE Ⅱ: AC-514
8. Torque gauge : For play and back tension
   Forward ; TW2111A, Reverse ; TW2121A
   Fast Forward and Rewind ; TW2231A
9. Test disc
   : CTS-1000(12cm),GRG-1211(8cm)
10. Jitter meter

Measurement conditions

Power supply voltage
AC110/127/220/230-240V(50Hz)

Measurement
output terminal : Speaker out
:TP101(Mesuring for TUNER/DECK/CD)
:Dummy load 6ohm

Radio input signal
AM modulation frequency : 400Hz
Modulation factor : 30%
FM modulation frequency : 400Hz
Frequency displacement : 22.5kHz

Frequency Range
AM 531kHz~1710kHz
FM 87.5MHz~108MHz

Standard measurement positions of volume and switch
Power : Standby (Light STANDBY Indicator)
S,A,BASS : OFF
Sound mode : OFF
Main VOL. : 0 Minimum
Travers mecha set position : Disc 1
Mic MIX VOL : MAX
ECHO : OFF

Precautions for measurement
1. Apply 30pF and 33kohm to the IF sweeper output side and 0.082 μF and 100kohm in series to the sweeper input side.
2. The IF sweeper output level should be made as low as possible within the adjustable range.
3. Since the IF sweeper is a fixed device, there is no need to adjust this sweeper.
4. Since a ceramic oscillator is used, there is no need to perform any MPX adjustment.
5. Since a fixed coil is used, there is no need to adjust the FM tracking.
6. The input and output earth systems are separated. In case of simultaneously measuring the voltage in both of the input and output systems with an electronic voltmeter for two channels, therefore, the earth should be connected particularly.
7. In the case of BTL connection amplifier, the minus terminal of speaker is not for earthing. Therefore, be sure not to connect any other earth terminal to this terminal. This system is of an OTL system.

■ Arrangement of adjusting positions

Cassette mechanism section (Mechanism A section)

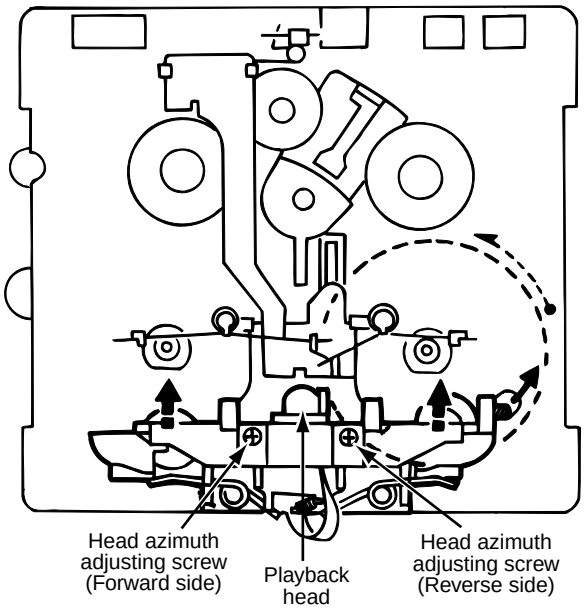

Cassette mechanism section (Back side)

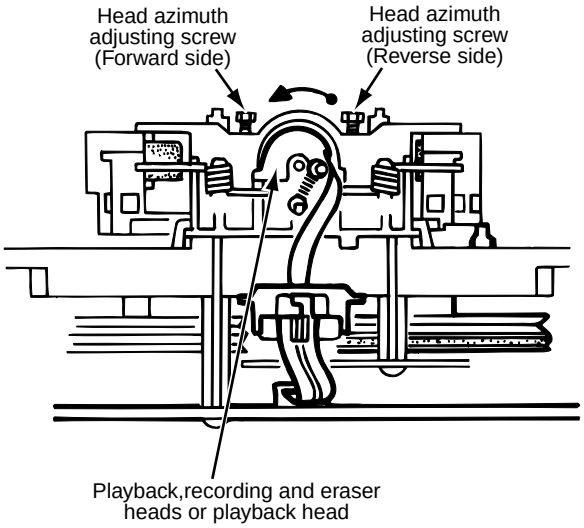

Cassette mechanism unit section

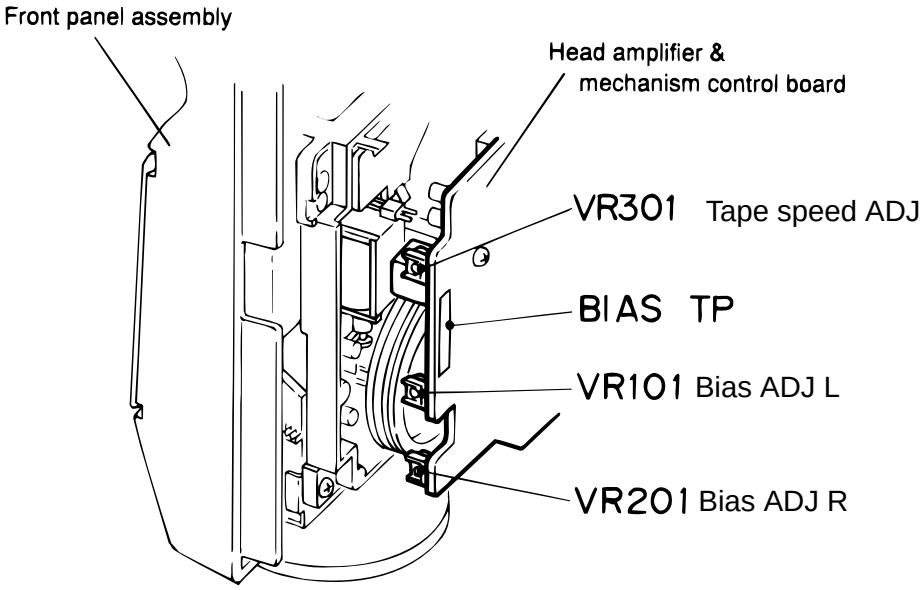

■ Tape recorder section

Items	Measurement conditions	Measurement method	Standard values	Adjusting positions
Confirmation of head angle	Test tape :TMT7036(10kHz) Measurement output terminal :Speaker terminal Speaker R (Load resistor:3Ω) :Headphone terminal	1.Playback the test tape TMT7036(10kHz). 2.With the playback mechanism or recording & playback mechanism, adjust the head azimuth screw so that the forward and reverse output levels become maximum.After adjustment,lock the head azimuth at least by half a turn. 3.In either case,this adjustment should be performed in both the forward and reverse directions with the head azimuth screw.	Maximum output	Adjust the head azimuth screw only when the head has been changed.
Confirmation of tape speed	Test tape :VTT712(3kHz) or TMT7036(3kHz) Measurement output terminal :Headphone terminal	<Constant speed> Adjust VR301 so that the frequency counter reading becomes 3,000Hz±60Hz when playing back the test tape VTT712(3kHz)with the playback mechanism or playback and recording mechanism after ending forward winding of the tape.	Tape speed of decks (A and B) :3,000Hz ±60Hz	VR301

■ Reference values for confirmation items

Items	Measurement conditions	Measurement method	Standard values	Adjusting positions
Double tape speed	Test tape :TMT7036(10kHz) Measurement output terminal :Speaker terminal Speaker R (Load resistance:3Ω) measurement output terminal :Headphone terminal	After setting to the double speed motor, confirm that the frequency counter reading becomes 4,800+400/-300Hz when the test tape VTT712 (3kHz) has been play back with the playback mechanism.	4,800+400/ -300Hz	Playback mechanism side
Difference between the forward and reverse speed. P.mecha and R/P mecha speed		When the test tape VTT712(3kHz) has been played back with the playback mechanism or recording and playback mechanism at the beginning of forward winding, the frequency counter reading of the difference between both of the mechanisms should be 6.0Hz or less.	60Hz or less	Both the playback and recording & playback mechanism
Wow & flutter	Test tape :TMT7036(10kHz) Measurement output terminal :Headphone terminal	When the test tape VTT712(3kHz) has been played back with the playback mechanism or recording and playback mechanism at the beginning of forward winding the frequency counter reading of wow& flutter should be 0.25% or less(WRMS).	with in 0.25% JIS(WTD)	Both the playback and recording & playback mechanism

■ Electrical performance

Items	Measurement conditions	Measurement method	Standard values	Adjusting positions
Adjustment of recording bias current (Reference value)	*Mode : Forward or reverse mode *Recording mode *Test tape :AC-514 and AC-225 Measurement output terminal :Both recording and headphone terminals	1.With the recording and playback mechanism, load the test tapes(AC-514 to TYPⅡ and AC-225 to TYPⅠ),and set the mechanism to the recording and pausing conditions in advance. 2.After connecting 100Ω in series to the recorder head,measure the bias current with a valve voltmeter at both of the terminals. 3.After resetting the [PAUSE] mode,start recording. At this time,adjust VR101 for LcH and VR201 for RcH so that the recording bias current values become 4.0μA (TYPⅠ) and 4.20μA(TYPⅡ).	AC-225 :4.20μA AC-514 :4.0μA	LcH :VR101 RcH :VR201
Adjustment of recording and playback frequency characteristics	Reference frequency :1kHz and 10kHz (REF:-20dB) Test tape :TYPⅡ AC-514 Measurement input terminal :OSC IN	1.With the recording and playback mechanism,load the test tape(AC-514 to TYPⅡ),and set the mechanism to the recording and pausing condition in advance. 2.While repetitively inputting the reference frequency signal of 1kHz and 10kHz from OSC IN, record and playback the test tape. 3.While recording and playing back the test tape in TYPⅡ,adjust VR101 for LcH and VR201 for RcH so that the output deviation between 1kHz and 10kHz becomes -1dB±2dB.	Output deviation between 1kHz and 10kH :-1dB±2dB	LcH :VR101 RcH :VR201

■ Reference values for electrical function confirmation items

Items	Measurement conditions	Measurement method	Standard values	Adjusting positions
Recording bias frequency	*Recording and playback side forward or reverse *Test tape :TYPⅡ AC-514 *Measurement terminal BIAS TP on P.C.board	1.While changing over to and from BIAS 1 and 2, confirm that the frequency is changed. 2.With the recording and playback mechanism. load the test tape (AC-514 to TYPⅡ),and set the mechanism to the recording and pausing conditions in advance. 3.Confirm that the BIAS TP frequency on the P.C.board is 100kHz±6kHz.	100kHz +9kHz -7kHz	
Eraser current (Reference value)	*Recording and playback side forward or reverse *Recording mode *Test tape :AC-514 and AC-225 Measurement terminal Both of the eraser head	1.With the recording and playback mechanism, load the test tapes(AC-514 to TYPⅡ and AC-225 to TYPⅠ),and set the mechanism to the recording and pausing condition in advance. 2.After setting to the recording conditions,connect 1MΩ in series to the eraser head on the recording and playback mechanism side,and measure the eraser current from both of the eraser terminal.	TYPⅡ :120mA TYPⅠ :75mA	

Diagnosis which uses extension wire method

System control P.C.board

1.Remove the metal cover and CD changer mechanism.
2.Remove the front panel assembly.
3.One screw **A** is removed, and relay board is removed.
4.As shown in fig.1, place the front panel assembly after opening it outward using the right side of the front panel as an axis.
5.The extension wire is connected with CN870 & CN871 on the INPUT/OUTPUT board and CN860 & CN861 on the main board.

Extension wire parts No.

QUQ412-4020CJ	FLAT WIRE
JIG-MXJ500	CONNECTOR Board x 2

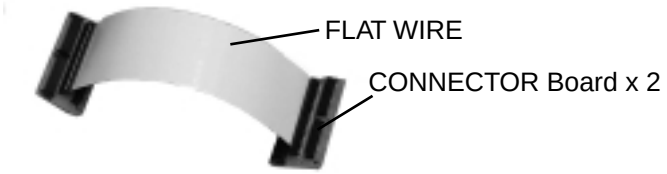

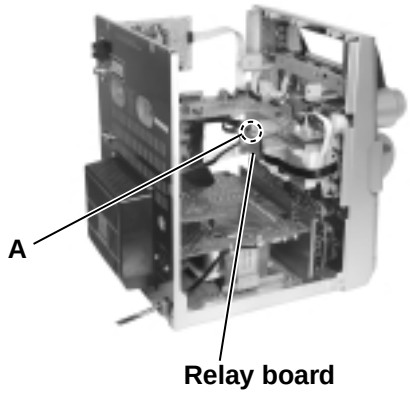

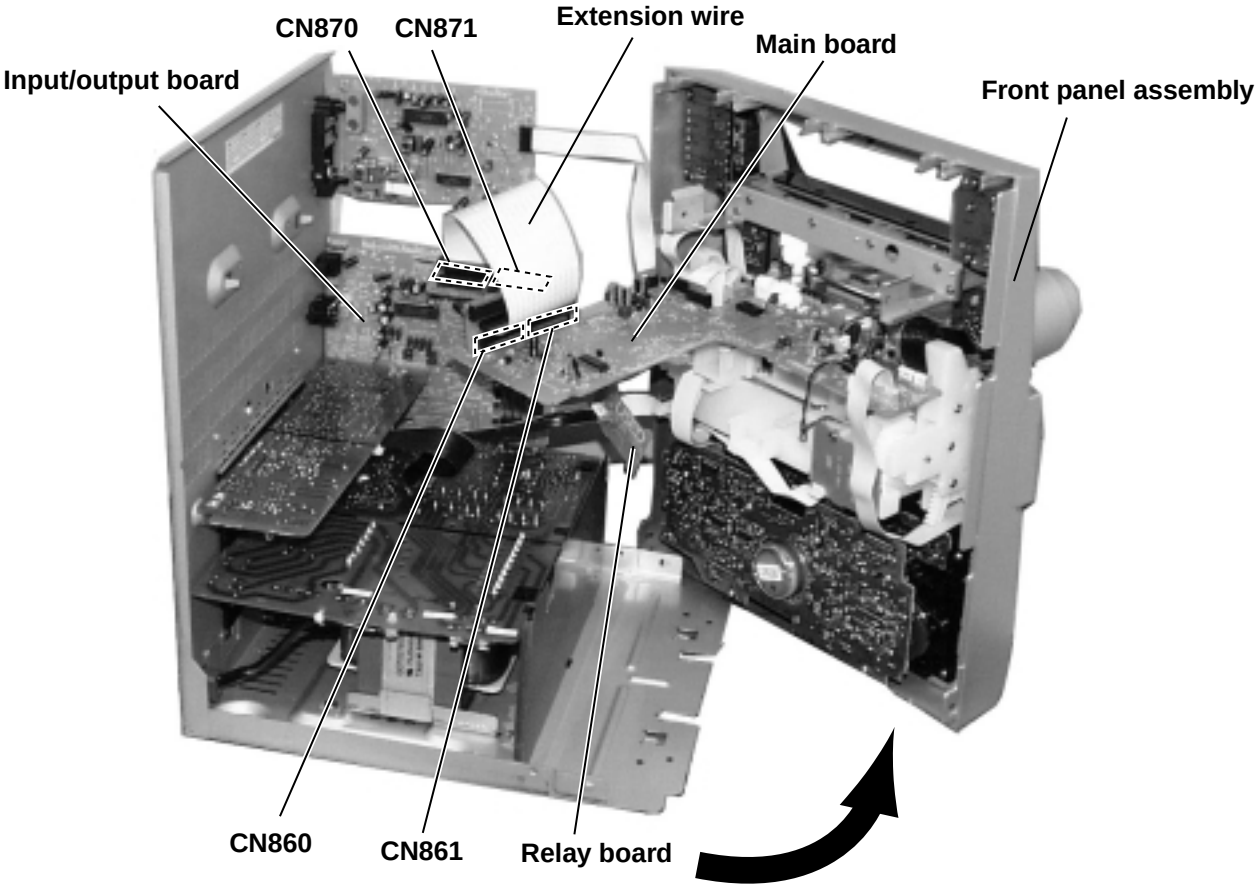

Fig.1

Flow of functional operation until TOC read

Power ON → Play Key → Slider turns REST SW ON.

Check Point: Confirm that the voltage at the pin5 of CN801 is "H"\"L"\"H".

↓ Automatic tuning of TE offset

↓ Laser ON → Check that the voltage at the pin40 of IC651 is + 5V?

↓ Detection of disc

↓ Automatic tuning of Focus offset

↓ Automatic measurement of Focus S-curve amplitude → Confirm that the Focus error S-cuve signal at the pin28 of IC651 is approx.2Vp-p

↓ Disc is rotated → Confirm that the signal from pin24 IC651 is 0V as a accelerated pulse during approx.400ms.

↓ Focus servo ON (Tracking servo ON)

↓ Automatic measurement of Tracking error amplitude → Confirm the waveform of the Tracking error signal. at the pin 25 of IC601 (R604) (See fig-1)

↓ Automatic tuning of Tracking error balance

↓ Automatic tuning of Focus error balance

↓ Automatic tuning of Focus error gain

↓ Automatic tuning of Tracking error gain

↓ TOC reading → Confirm the eys-pattern at the lead of TP1

↓ Play a disc

■ Tracking error waveform at TOC reading

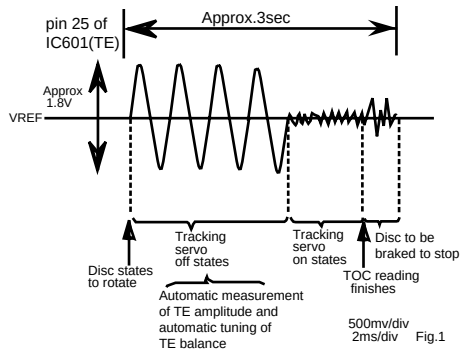

Fig.1

Maintenance of laser pickup

(1) Cleaning the pick up lens
Before you replace the pick up, please try to clean the lens with a alcohol soaked cotton swab.

(2) Life of the laser diode
When the life of the laser diode has expired, the following symptoms will appear.

1. The level of RF output (EFM output:amplitude of eye pattern) will below.

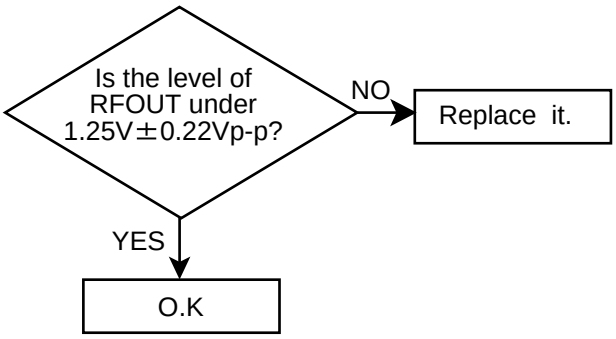

Replacement of laser pickup

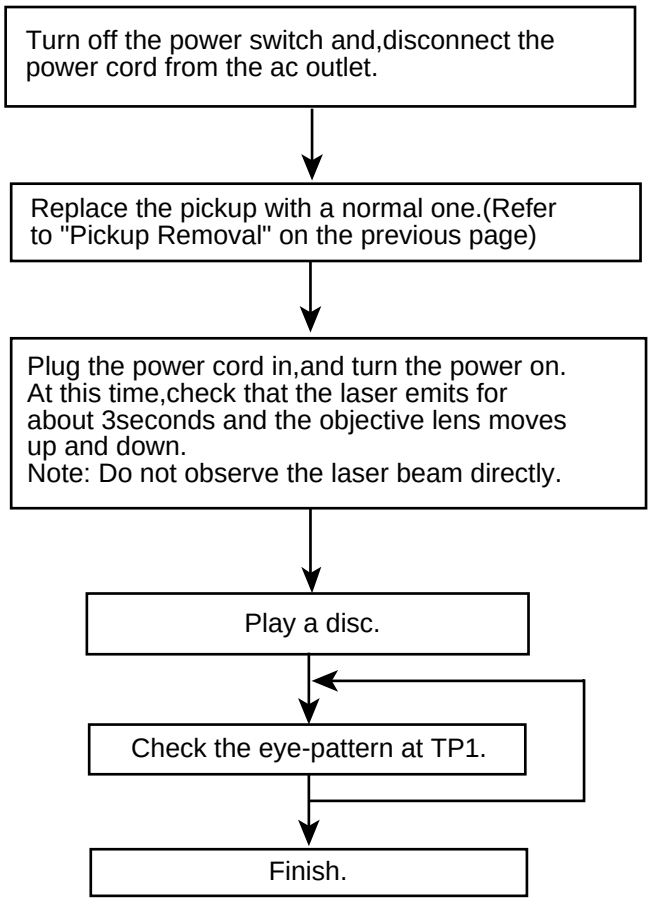

(3) Semi-fixed resistor on the APC PC board The semi-fixed resistor on the APC printed circuit board which is attached to the pickup is used to adjust the laser power.Since this adjustment should be performed to match the characteristics of the whole optical block, do not touch the semi-fixed resistor.
If the laser power is lower than the specified value,the laser diode is almost worn out, and the laser pickup should be replaced.
If the semi-fixed resistor is adjusted while the pickup is functioning normally,the laser pickup may be damaged due to excessive current.

Description of major ICs

■ AN8806SB-W (IC601) : RF&Servo AMP

1.Pin layout

PD	1	36	PDAC
LD	2	35	PDBD
LDON	3	34	PDF
LDP	4	33	PDE
VCC	5	32	PDER
RF-	6	31	PDFR
RF OUT	7	30	TBAL
RF IN	8	29	FBAL
C.AGC	9	28	EF-
ARF	10	27	EF OUT
C.ENV	11	26	TE-
C.EA	12	25	TE OUT
CS BDO	13	24	CROSS
BDO	14	23	TE BPF
CS BRT	15	22	VDET
OFTR	16	21	LD OFF
/NRFDET	17	20	VREF
GND	18	19	ENV

2.Block diagram

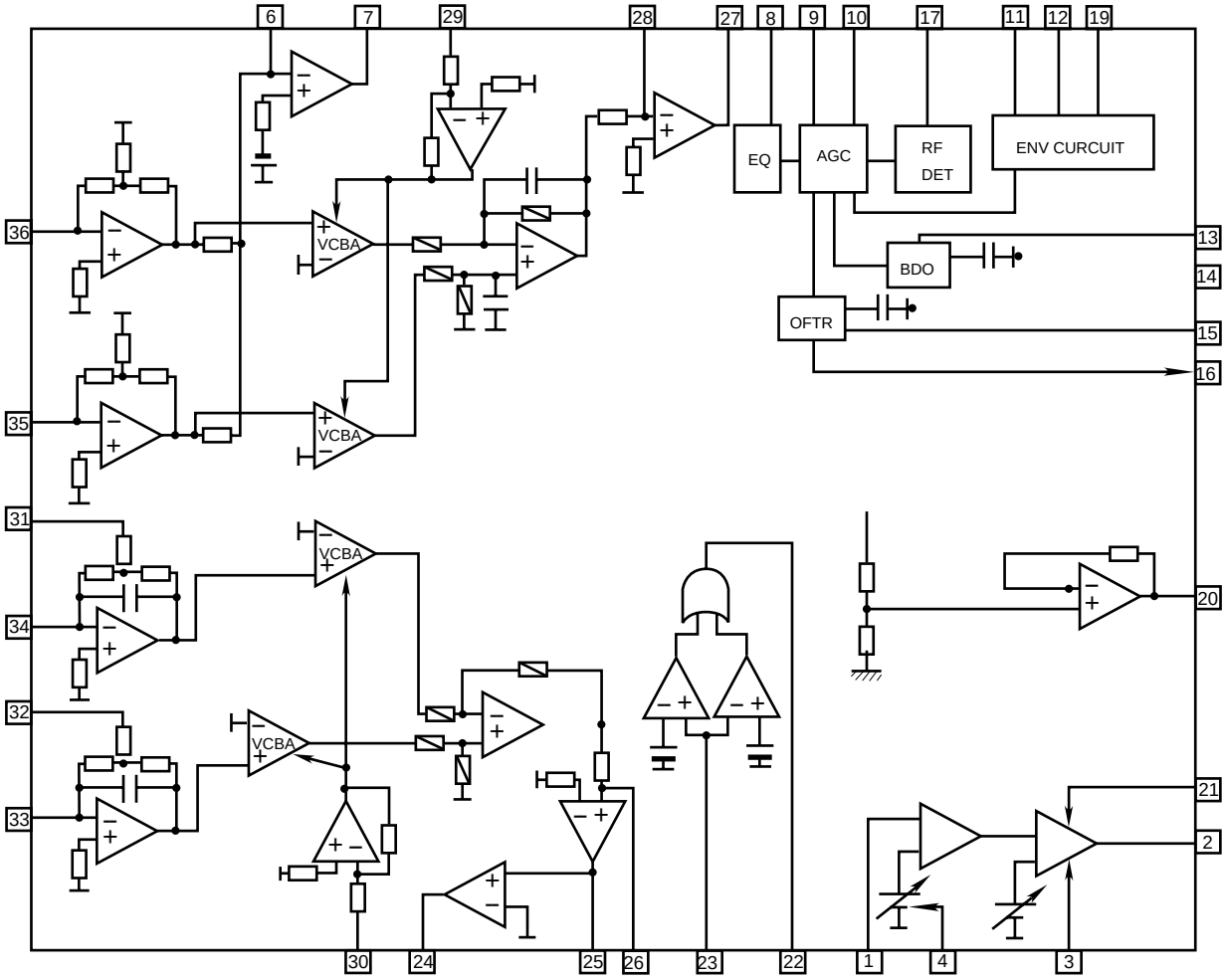

3. Pin function

Pin No.	Symbol	I/O	Description
1	PD	I	APC amp input terminal
2	LD	O	APC amp output terminal
3	LD ON	I	APC ON/OFF control terminal
4	LDP	--	Connect to ground
5	VCC	--	Power supply
6	RF-	I	Inverse input pin for RF amp
7	RF OUT	O	RFamp output
8	RF IN	I	RF input
9	C.AGC	I/O	Connecting pin of AGC loop filter
10	ARF	O	RF output
11	C.ENV	I/O	A capacitor is connected to this terminal to detect the envelope of RF signal
12	C.EA	I/O	A capacitor is connected to this terminal to detect the envelope of RF signal
13	CS BDO	I/O	A capacitor is connected to detect the lower envelope of RF signal
14	BDO	O	BDO output pin
15	CS BRT	I/O	A capacitor is connected to detect the lower envelope of RF signal
16	OFTR	O	Of-track status signal output
17	/NRFDET	O	RF detection signal output
18	GND	--	Ground
19	ENV	O	Envelope output
20	VREF	O	Reference voltage output
21	LD OFF	--	Connect to ground
22	VDET	O	Vibration detection signal output
23	TE BPF	I	Input pin of tracking error through BPF
24	CROSS	O	Tracking error cross output
25	TE OUT	O	Tracking error signal output
26	TE-	I	Inverse input pin for tracking error amp
27	FE OUT	O	Output pin of focus error
28	FE-	I	Inverse input pin for focus error amp
29	FBAL	I	Focus balance control
30	TBAL	I	Tracking balance control
31	PDFR	I/O	F I-V amp gain control
32	PDER	I/O	E I-V amp gain control
33	PDF	I	I-V amp input
34	PDE	I	I-V amp input
35	PD BD	I	I-V amp input
36	PD AC	I	I-V amp input

■ BA15218 (IC526) : OP AMP.

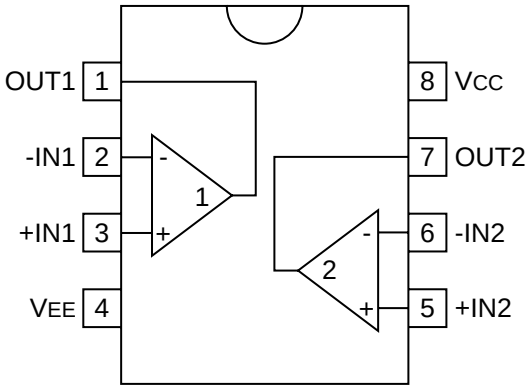

■ BA3126N (IC301) : SWITCH

1. Terminal layout and Block diagram

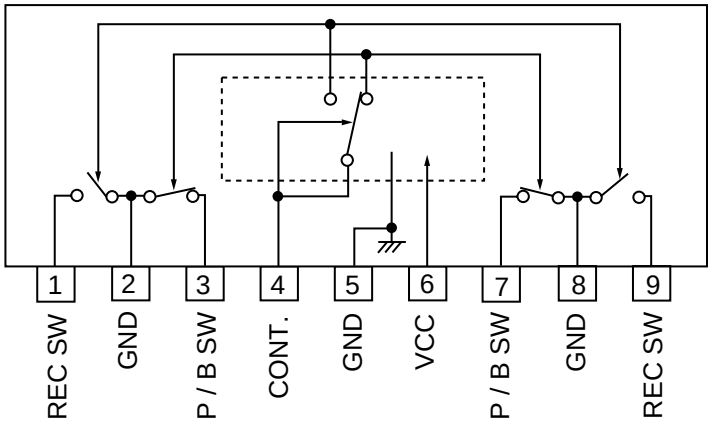

■ GP1U281X (IC915) : Receiver for remote controller

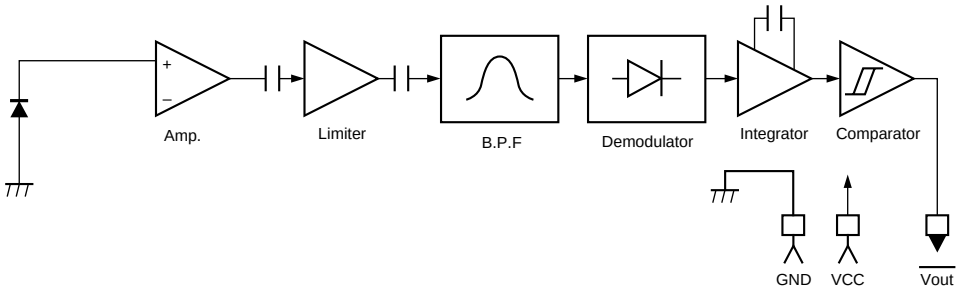

■ BA3835S (IC812) : SPI B.P.F.

1.Block Diagrams

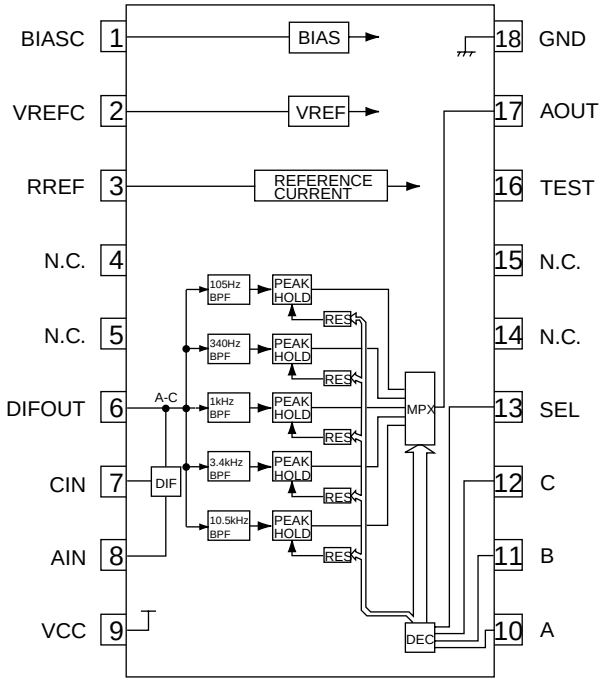

2.Pin Function

No.	Symbol	I/O	Function
1	BIASC	-	Decoupling condenser connection terminal.
2	VREFC	-	Decoupling condenser connection terminal.
3	RPEF	-	Reference resistance connection terminal.
4	NC	-	Non connect.
5	NC	-	Non connect.
6	NC	-	Non connect.
7	CIN	-	Connected to GND of audio system through a condenser.
8	AIN	I	Inputs the audio signal through a condenser.
9	VCC	-	Power supply terminal.
10	SPI-A	O	Output selection control terminal.
11	SPI-B	O	Output selection control terminal.
12	SPI-C	O	Output selection control terminal.
13	SPICSB	O	Output selection control terminal.
14	NC	-	Non connect.
15	NC	-	Non connect.
16	TEST	-	Connected to GND upon normal use.
17	AOUT	O	Multi-plexor output terminal.
18	GND	-	Connect to GND.

■ BA3837(IC466):MIC Mixer

1.Block diagram

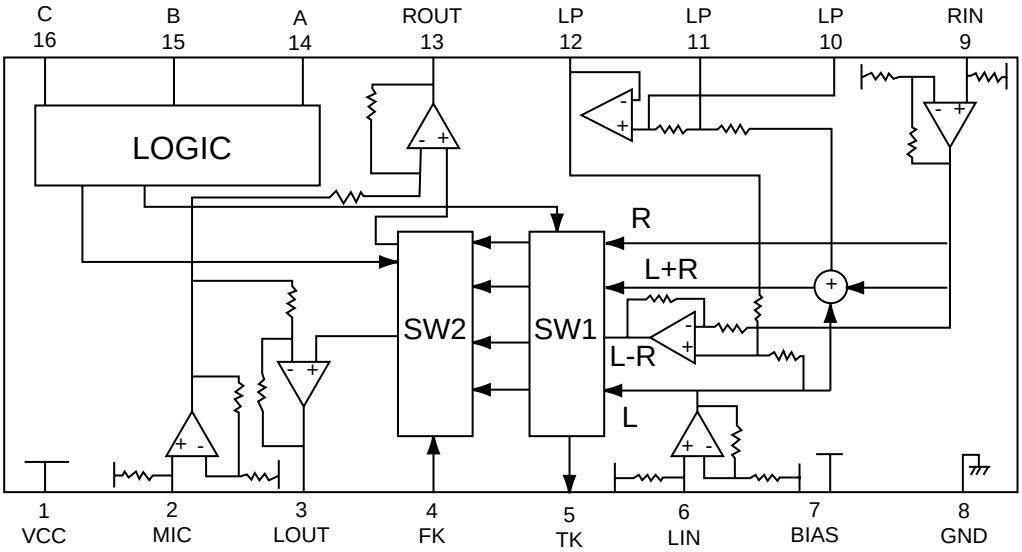

2.Pin function

Pin No.	Symbol	I/O	Description
1	VCC	-	Power supply
2	MIC IN	I	Microphone mixing input
3	LOUT	O	Channel L output
4	FK	-	Non connect
5	TK	-	Non connect
6	LIN	I	Channel L input
7	BIAS	I	Signal bias
8	GND	-	Connect to GND
9	RIN	I	Channel R input
10	LPF1	O	Connects to LPF time constant element
11	LPF2	O	Connects to LPF time constant element
12	LPF3	O	LPF outpout
13	ROUT	O	Channel R output
14	CONTA	I	Mode select input A
15	CONTB	I	Mode select input B
16	CONTC	I	Mode select input C

■ BU1427K (IC152) : Digital RGB-TV encoder

1. Terminal layout

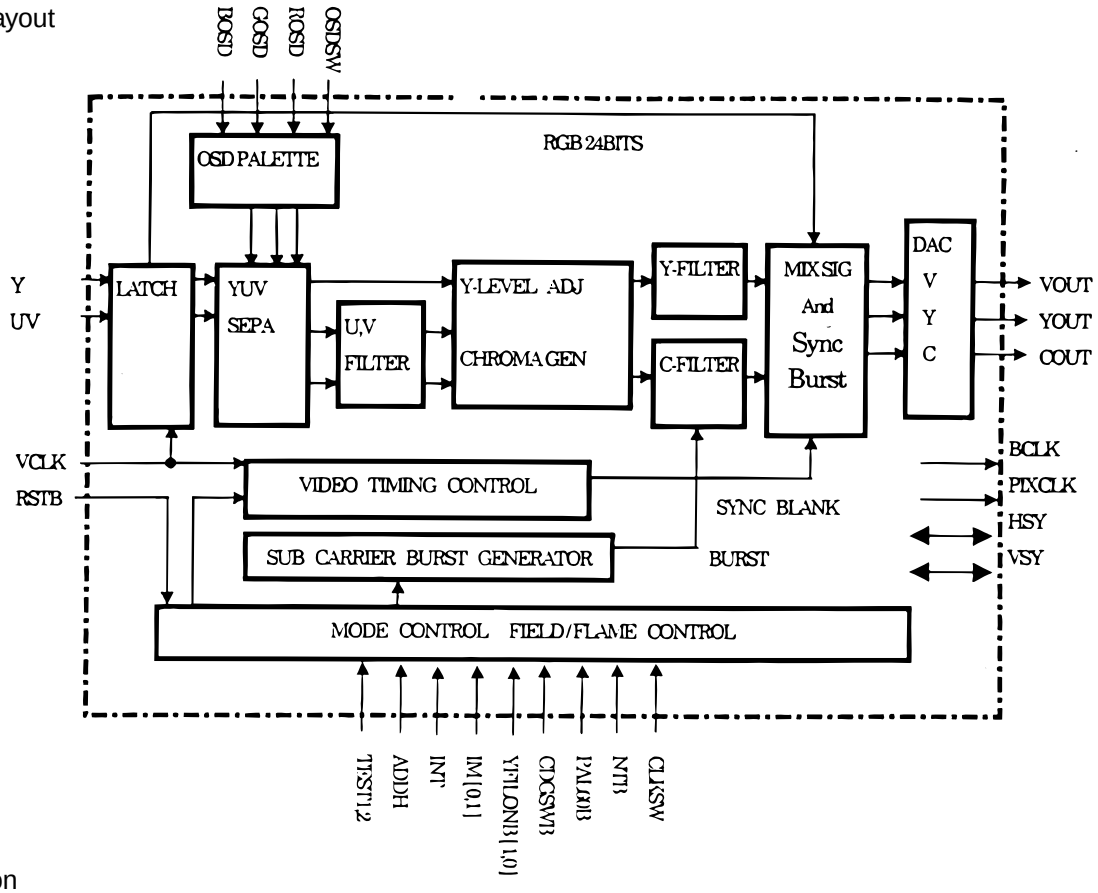

2. Pin function

No.	NAME	FUNCTION	No.	NAME	FUNCTION
1	BOSD	OSD BLUE DATA INPUT	33	SLABEB	SELECT MASTER/SLAVE
2	Y0/YUV0	YUV DATA	34	ADDH	+0.5/-0.5 LINE at NON-INTER
3	Y1/YUV1	YUV DATA	35	VREF-C	DAC BIAS
4	Y2/YUV2	YUV DATA	36	CGND	CHROMA OUTPUT GROUND
5	Y3/YUV3	YUV DATA	37	COUT	CHROMA OUTPUT
6	Y4/YUV4	YUV DATA	38	VGND	Composite Output Ground
7	Y5/YUV5	YUV DATA	39	VOUT	COMPOSITE OUTPUT
8	Y6/YUV6	YUV DATA	40	AVSS	Analog Ground (DAC, VREF)
9	GND	DIGITAL GROUND	41	P-VDD	POWER(DAC) VDD
10	Y7/YUV7	YUV DATA	42	IR	REFERENCE RESISTOR
11	UV0	UV DATA	43	AVDD	ANALOG (VREF) VDD
12	UV1	UV DATA	44	YGND	Luminance Output Ground
13	UV2	UV DATA	45	YOUT	Luminance Output
14	UV3	UV DATA	46	VDD	DIGITAL VDD
15	OSDSW	OSD ENABLE/DISABLE	47	YFILON2B	Y-FILSEL THROU/FILON2
16	CDGSWB	SELECT Video CD/CD-G	48	YCOFF	DAC(YOUT,COUT) OFF
17	UV4	UV DATA	49	YFILON1B	Y-FILSEL THROU/ FILON1
18	UV5	UV DATA	50	PAL60B	NORMAL/PAL60 at PALMODE
19	UV6	UV DATA	51	VCLK	Video Clock Input
20	UV7	UV DATA	52	RSTB	NORMAL/RESET
21	GND	DIGITAL GROND	53	CLKSW	SEL*1CLK/*2CLK
22	NTB	SELECT NISC/PAL MODE	54	RD0	Pull Down to GND
23	IM0	SELECT YUV/YUV	55	RD1	Pull Down to GND
24	IM1	SELECT DAC/NORMAL	56	RD2	Pull Down to GND
25	TEST1	Normally pull down to GND	57	ROSD	OSD RED DATA INPUT
26	TEST2	SELECT U/V TIMING	58	RD3	Pull Down to GND
27	VSY	V-SYNC INPUT or OUTPUT	59	BCLK/RD4	BASE CLOCK OUT
28	HSY	H-SYNC INPUT or OUTPUT	60	RD5	Pull Down to GND
29	PIXCLK	1/2 freq. of BCLK	61	IO VDD	VDD for I/O
30	VDD	DIGITAL VDD	62	RD6	Pull Down to GND
31	IO VDD	VDD for I/O	63	RD7	Pull Down to GND
32	INT	Interlace /Non-Interlace	64	GOSD	OSDGREEN DATA INPUT

* The pin built-in pull-down resister. (30kohm)

■ BU9253AS(IC902) : LPF&ECHO MIX.

1.Pin layout & block diagram

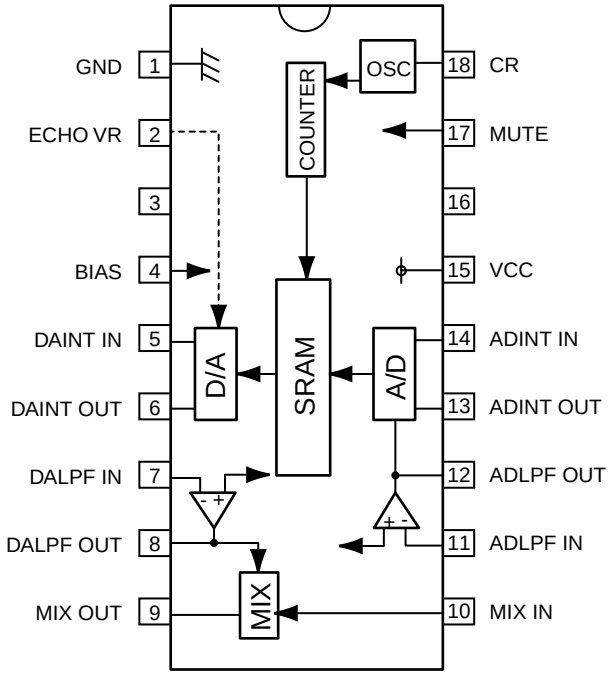

2.Pin function

Pin No.	Symbol	I/O	Descriptions
1	GND	-	Connect GND
2	ECHO VR	I	Echo level control
3		-	Non connect
4	BIAS	-	Analog part DC bias
5	DAINT IN	I	DA side integrator input
6	DAINT OUT	O	DA side integrator output
7	DALPF IN	I	DA side LPF input
8	DALPF OUT	O	DAside LPF output
9	MIX OUT	O	Mix AMP output for original tone& echo tone
10	MIX IN	I	Mix AMP input pin for original tone
11	ADLPF IN	I	AD side LPF input
12	ADLPF OUT	O	AD side LPF output
13	ADINT OUT	O	AD side integrator output
14	ADINT IN	I	AD side integrator input
15	VCC	-	Power supply
16	NC2	-	Non connect
17	MUTE	I	Mute control signal input
18	CR	-	CR pin for oscillator

■ HD74HCT244FP-XE (IC181) : Buffer

1. Terminal layout

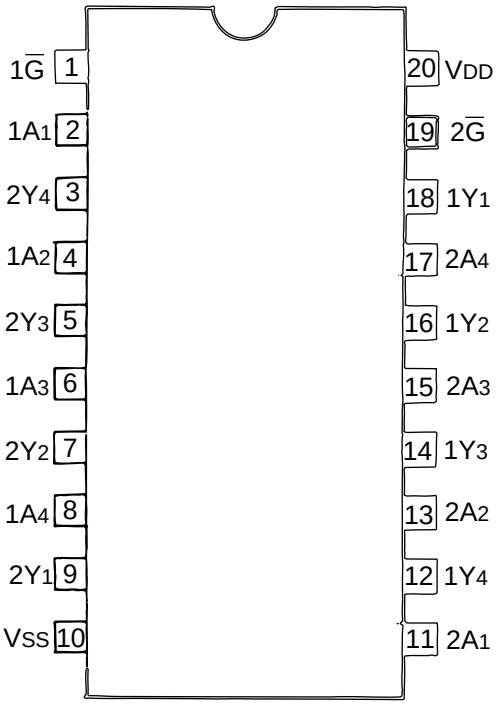

2. Block diagram

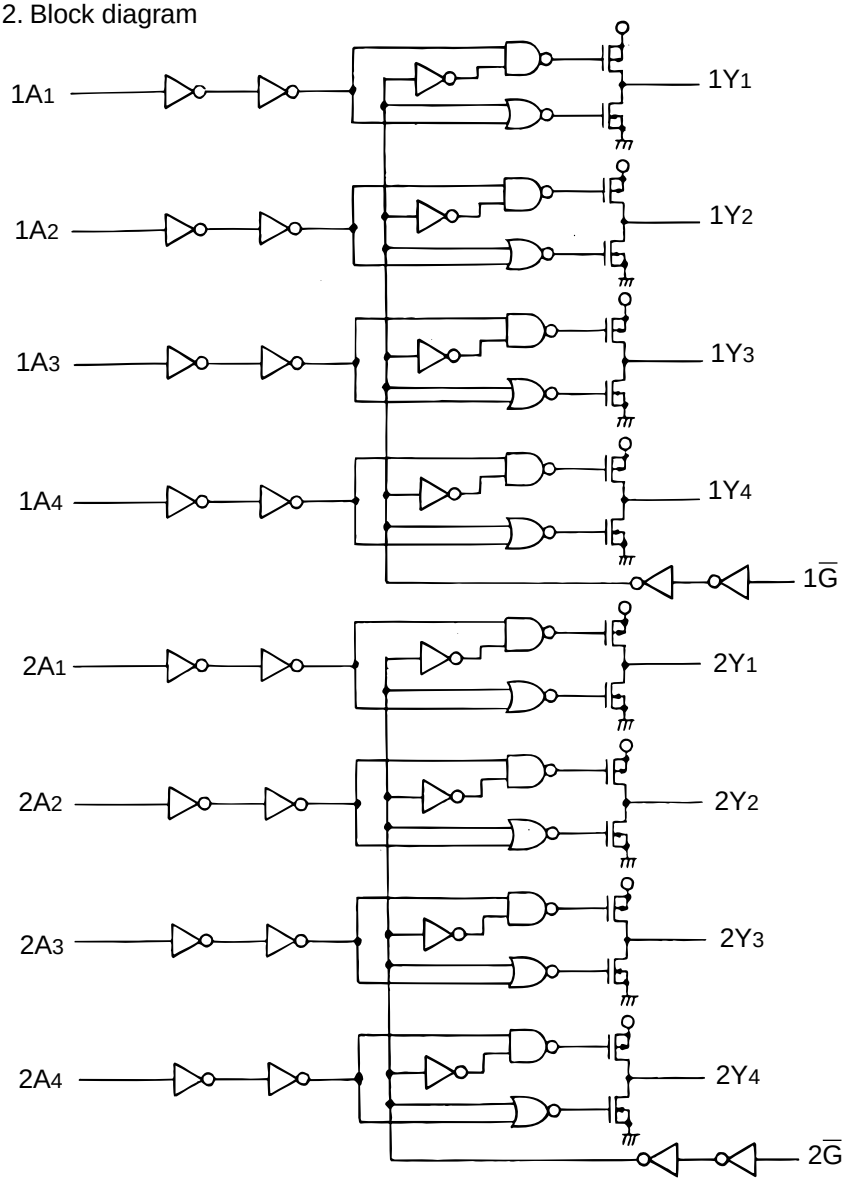

■ KM416S1020CTG10 (IC104) : 16Mb SDRAM

1. Terminal layout

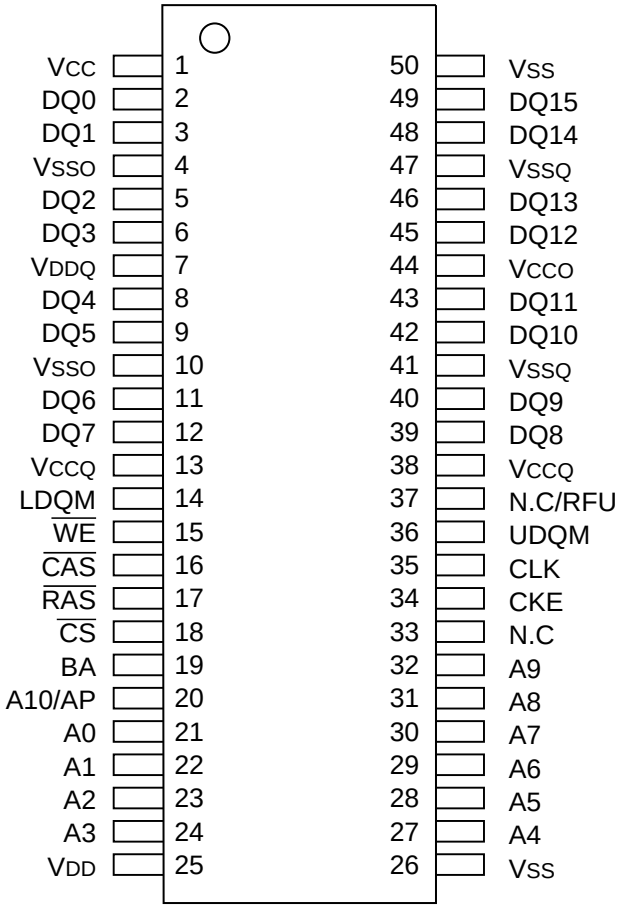

2. Pin function

Pin name	Function
CLK	System clock
$\overline{CS}$	Chip select
CKE	Clock enable
A_0 ～ A_{10}/AP	Address
BA	Bank select address
$\overline{RAS}$	Row address strobe
$\overline{CAS}$	Column address Strobe
$\overline{WE}$	Write enable
L(U)DQM	Data input/Output mask
DQ_0 ～ 15	Data input/Output
V_{DD}/V_{SS}	Power supply/Ground
V_{DDQ}/V_{SSQ}	Data output power/Ground
N.C/RFU	No connection/Reserved for future use

■ LA1838(IC1): FM AM IF AMP&detector, FM MPX decoder

1. Block Diagram

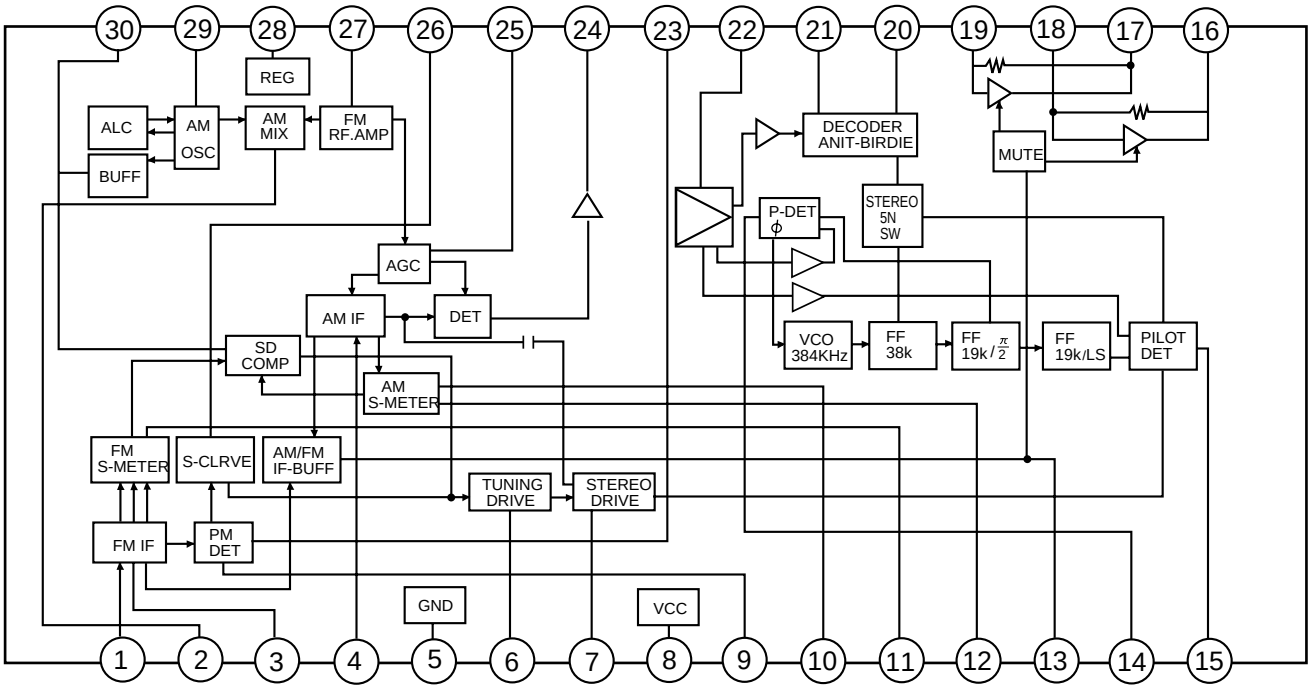

2. Pin Function

Pin No.	Symbol	I/O	Function	Pin No.	Symbol	I/O	Function
1	FM IN	I	This is an input terminal of FM IF signal.	16	L OUT	O	Left channel signal output.
2	AM MIX	O	This is an out put terminal for AM mixer.	17	R OUT	O	Right channel signal output.
3	FM IF	I	Bypass of FM IF	18	L IN	I	Input terminal of the left channel post AMP.
4	AM IF	I	Input of AM IF Signal.	19	R IN	I	Input terminal of the right channel post AMP.
5	GND	–	This is the device ground terminal.	20	RO	O	Mpx Right channel signal output.
6	TUNED	O	When the set is tuning, this terminal becomes "L".	21	LO	O	Mpx Left channel signal output.
7	STEREO	O	Stereo indicator output. Stereo "L", Mono: "H"	22	IF IN	I	Mpx input terminal
8	VCC	–	This is the power supply terminal.	23	FM OUT	O	FM detection output.
9	FM DET	–	FM detect transformer.	24	AM DET	O	AM detection output.
10	AM SD	–	This is a terminal of AM ceramic filter.	25	AM AGC	I	This is an AGC voltage input terminal for AM
11	FM VSM	O	Adjust FM SD sensitivity.	26	AFC	–	This is an output terminal of voltage for FM-AFC.
12	AM VSM	O	Adjust AM SD sensitivity.	27	AM RF	I	AM RF signal input.
13	MUTE	I/O	When the signal of IF REQ of IC121(LC72131) appear, the signal of FM/AM IF output. //Muting control input.	28	REG	O	Register value between pin 26 and pin28 desides the frequency width of the input signal.
14	FM/AM	I	Change over the FM/AM input. "H" :FM, "L" : AM	29	AM OSC	–	This is a terminal of AM Local oscillation circuit.
15	MONO/ST	O	Stereo : "H", Mono: "L"	30	OSC BUFFER	O	AM Local oscillation Signal output.

■ LA6541-X(IC801) : Servo Driver

1. Pin Layout & Block Diagram

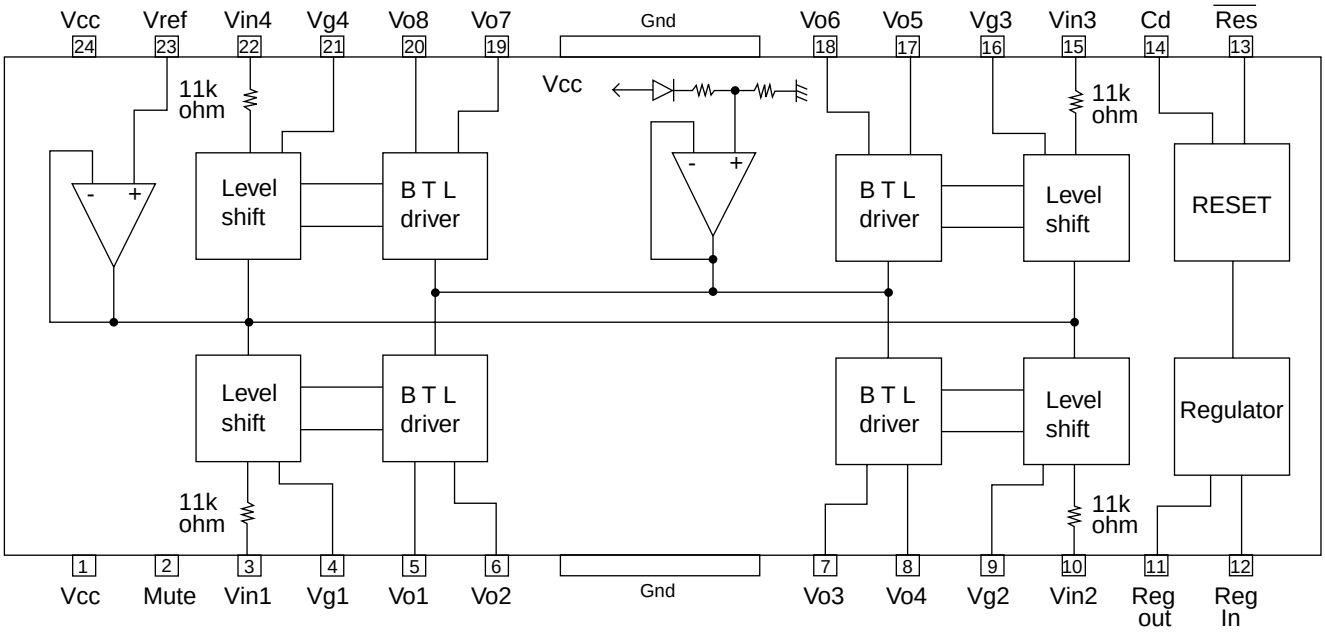

2. Pin functions

Pin No.	Symbol	Function
1	Vcc	Power supply (Shorted to pin 24)
2	Mute	All BTL amplifier outputs ON/OFF
3	Vin1	BTL AMP 1 input pin
4	Vg1	BTL AMP 1 input pin (For gain adjustment)
5	Vo1	BTL AMP 1 input pin (Non inverting side)
6	Vo2	BTL AMP 1 input pin (Inverting side)
7	Vo3	BTL AMP 2 input pin (Inverting side)
8	Vo4	BTL AMP 2 input pin (Non inverting side)
9	Vg2	BTL AMP 2 input pin (For gain adjustment)
10	Vin2	BTL AMP 2 input pin
11	Reg Out	External transistor collector (PNP) connection. 5V power supply output
12	Reg In	External transistor (PNP) base connection
13	Res	Reset output
14	Cd	Reset output delay time setting (Capacitor connected externally)
15	Vin3	BTL AMP 3 input pin
16	Vg3	BTL AMP 3 input pin (For gain adjustment)
17	Vo5	BTL AMP 3 output pin (Non inverting side)
18	Vo6	BTL AMP 3 output pin (Inverting side)
19	Vo7	BTL AMP 4 output pin (Inverting side)
20	Vo8	BTL AMP 4 output pin (Non inverting side)
21	Vg4	BTL AMP 4 output pin (For gain adjustment)
22	Vin4	BTL AMP 4 output pin
23	Vref	Level shift circuit's reference voltage application
24	Vcc	Power supply (Shorted to pin 1)

■ LB1641 (IC853) : DC Motor Driver

1. Pin Layout

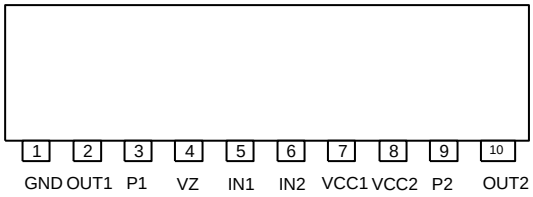

2. Pin Functions

Input		Output		Mode
IN1	IN2	OUT1	OUT2	
0	0	0	0	Brake
1	0	1	0	CLOCKWISE
0	1	0	1	COUNTER-CLOCKWISE
1	1	0	0	Brake

■ NJM4580L (IC901) : Mic Amplifier

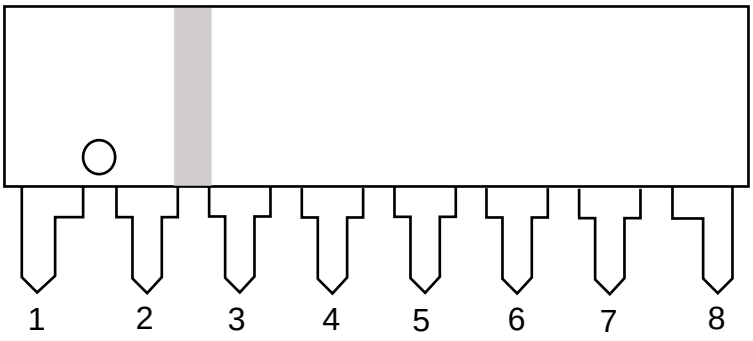

1. A OUTPUT
2. A-INPUT
3. A+INPUT
4. V⁻
5. B+INPUT
6. B-INPUT
7. B OUTPUT
8. V+

■ TA8409S(IC851,IC852):Motor driver

1.Pin layout

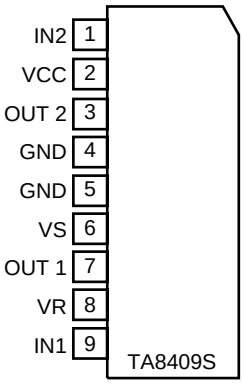

2.Pin function

INPUT		OUTPUT		MODE
IN1	IN2	OUT1	OUT2	MOTOR
0	0	∞	∞	STOP
1	0	H	L	CW/CCW
0	1	L	H	CCW/CW
1	1	L	L	BRAKE

■ NJM4580E-W(IC652) : OP amp

1. Terminal layout

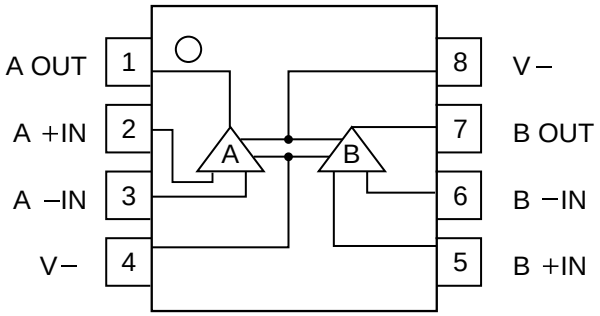

2. Block diagram

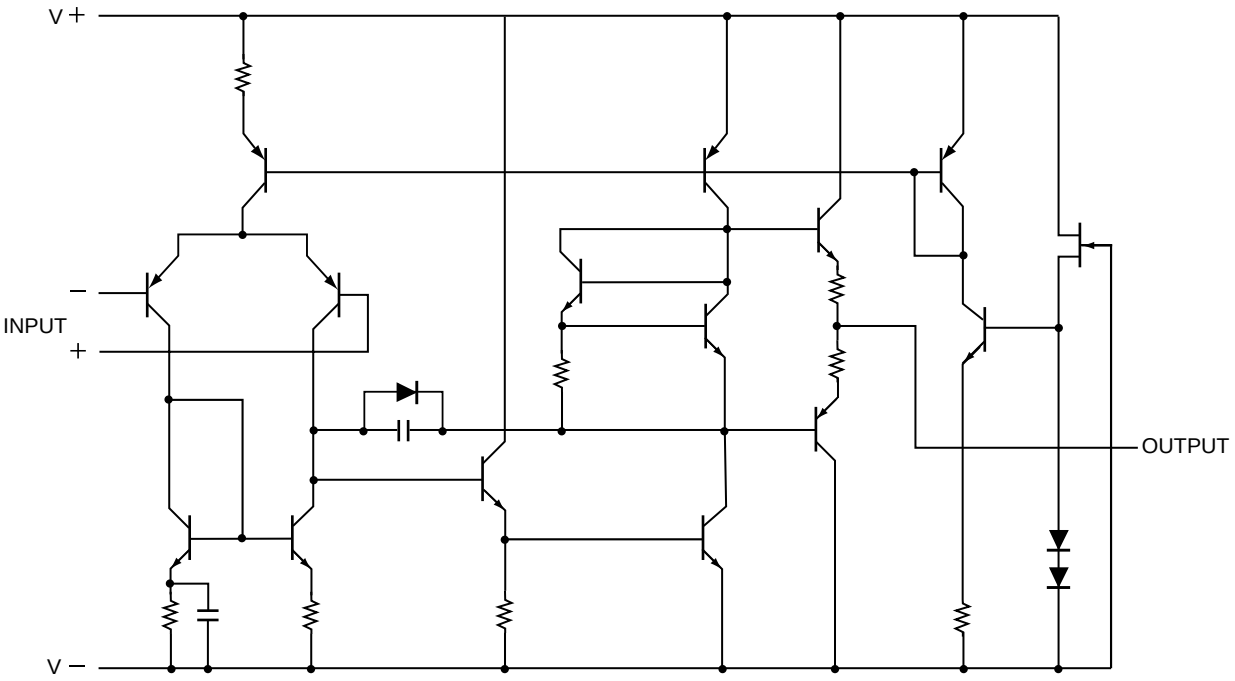

■ MN35511(IC651) : Digital servo & processor

1.Pin layout

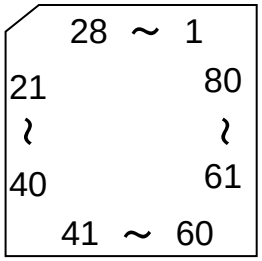

2.Block diagram

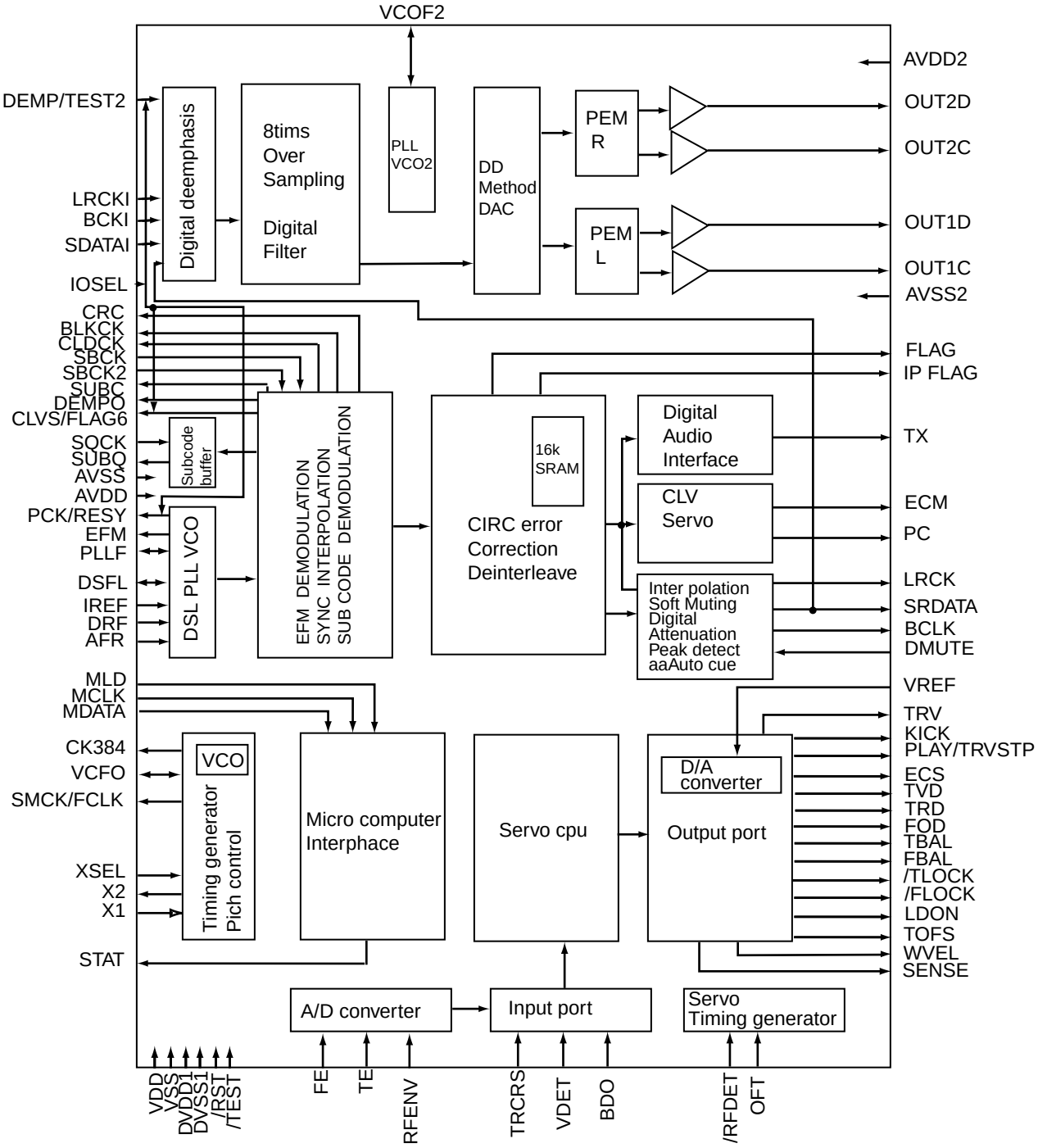

3. Pin function

Pin No.	symbol	I/O	Description	Pin No.	symbol	I/O	Description
1	BCLK	O	Bit clock output for SRDATA	41	TES	–	Non connect
2	LRCK	O	Identification signal output of Lch and Rch	42	PLAY	–	Non connect
3	SRDATA	O	Serial data output	43	WVEL	–	Non connect
4	DVDD1	–	Power supply (Digital)	44	ARF	I	RF signal input
5	DVSS1	–	Connected to GND	45	IREF	I	Reference current input pin
6	TX	O	Digital audio interface output	46	DRF	I	Bias pin for DSL
7	MCLK	I	μcom command clock signal input (Data is latched at signal's rising point)	47	DSLF	I/O	Loop filter pin for DSL
8	MDATA	I	μcom command data input	48	PLLF	I/O	Loop filter pin for PLL
9	MLD	I	μcom command load signal input	49	VCOF	–	Not used
10	SENSE	-	Non connect	50	AVDD2	–	Power supply(Analog)
11	FLOCK	-	Non connect	51	AVSS2	–	Connected to GND(Analog)
12	TLOCK	-	Non connect	52	EFM	–	Non connect
13	BLKCK	-	Non connect	53	PCK	–	Non connect
14	SQCK	I	Outside clock for sub-code Q resister input	54	PDO	–	Non connect
15	SUBQ	O	Sub-code Q -code output	55	SUBC	–	Non connect
16	DMUTE	–	Connected to GND	56	XSEL	I	Clock input for subcode/serial output
17	STATUS	O	Status signal (CRC,CUE,CLVS,TTSTOP,ECLV,SQOK)	57	VSS	–	Connected to GND(for X'tal oscillation circuit)
18	RST	I	Reset signal input (L:Reset)	58	XI	I	Input of 16.9344MHz X'tal oscillation circuit
19	SMCK	–	Non connect	59	X2	O	Output of X'tal oscillation circuit
20	PMCK	–	Non connect	60	VDD	–	Power supply(for X'tal cscillation circuit)
21	TRV	O	Traverse enforced output	61	VCOF2	O	PLL loop filter terminal for jitter absorption
22	TVD	O	Traverse drive output	62	AVSS1	O	Ground terminal for audio DAC
23	PC	–	Non connect	63	OUT1C	O	PEM output terminal 1C
24	ECM	O	Spindle motor drive signal (Enforced mode output) 3-State	64	OUT1D	O	PEM output terminal 1D
25	ECS	O	Spindle motor drive signal (Servo error signal output)	65	OUT2D	O	PEM output terminal 2D
26	KICK	O	Kick pulse output	66	OUT2C	O	PEM output terminal 2C
27	TRD	O	Tracking drive output	67	AVDD1	O	Power supply for audio DAC
28	FOD	O	Focus drive output	68	DEMPO	-	Non connect
29	VREF	I	Reference voltage input pin for D/A output block (TVD,FOD,FBA,TBAL)	69	CK384	O	384fs clock output
30	FBAL	O	Focus Balance adjust signal output	70	IOSEL	I	Mode switch terminal
31	TBAL	O	Tracking Balance adjust signal output	71	TEST	I	Test mode setting terminal
32	FE	I	Focus error signal input(Analog input)	72	SBCK2	I	Sub code/data reading clock input
33	TE	I	Tracking error signal input(Analog input)	73	SUBC	O	Sub code/serial output
34	RF ENV	I	RF envelope signal input(Analog input)	74	SBCK	I	Clock input for sub code/serial output
35	VDET	I	Vibration detect signal input(H:detect)	75	CLDCK	O	Sub code /frame clock signal output terminal
36	OFT	I	Off track signal input(H:off track)	76	IPFLAG	I	Interpolation flag signal output H:Interpolation
37	TRCRS	I	Track cross signal input	77	DEMPI	I	IOSEL:L The outside DEMPO input terminal
38	RFDET	I	RF detect signal input(L:detect)	78	SDATI	I	SRDATA input terminal
39	BDO	I	BDO input pin(L:detect)	79	LRCKI	I	When IOSEL is "L", LRCK input H:Lch data L:Rch data
40	LDON	O	Laser ON signal output(H:on)				
				80	BCKI	I	When IOSEL is "L", BCK input

■ TC74VHC00FT-X(IC106) : Wright timing control

1.Terminal layout / Block diagram

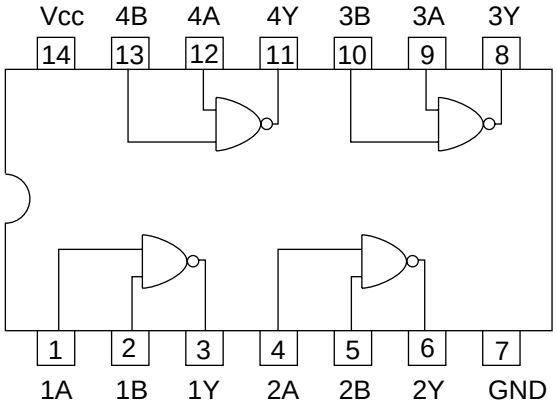

■ TC74VHC74FT-X (IC107) : Flip-Flop

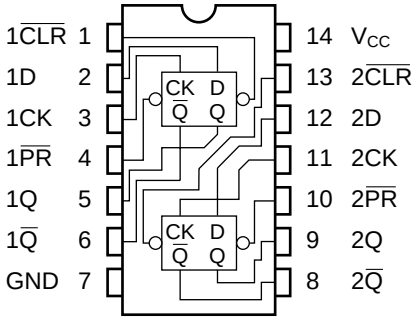

(TOP VIEW)

■ TDA7439 (IC436) : Conrtol volume

1.Pin layout

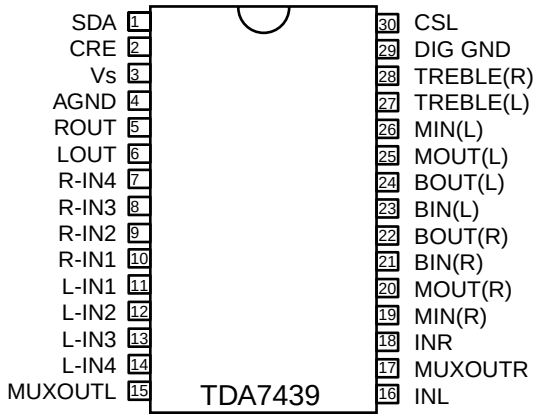

2.Block diagram

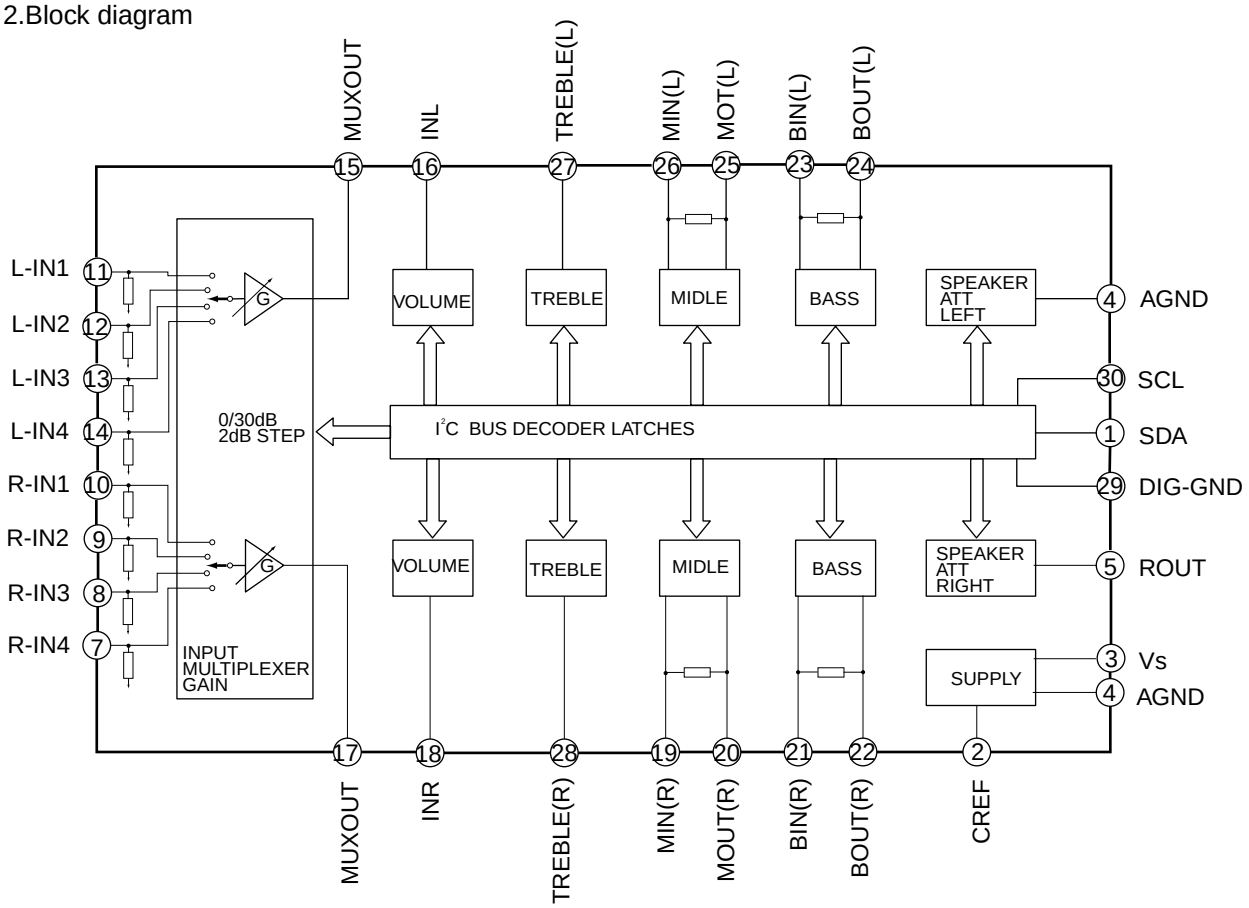

■ BU1427K (IC701) : Digital RGB-TV Encoder

1. Terminal layout

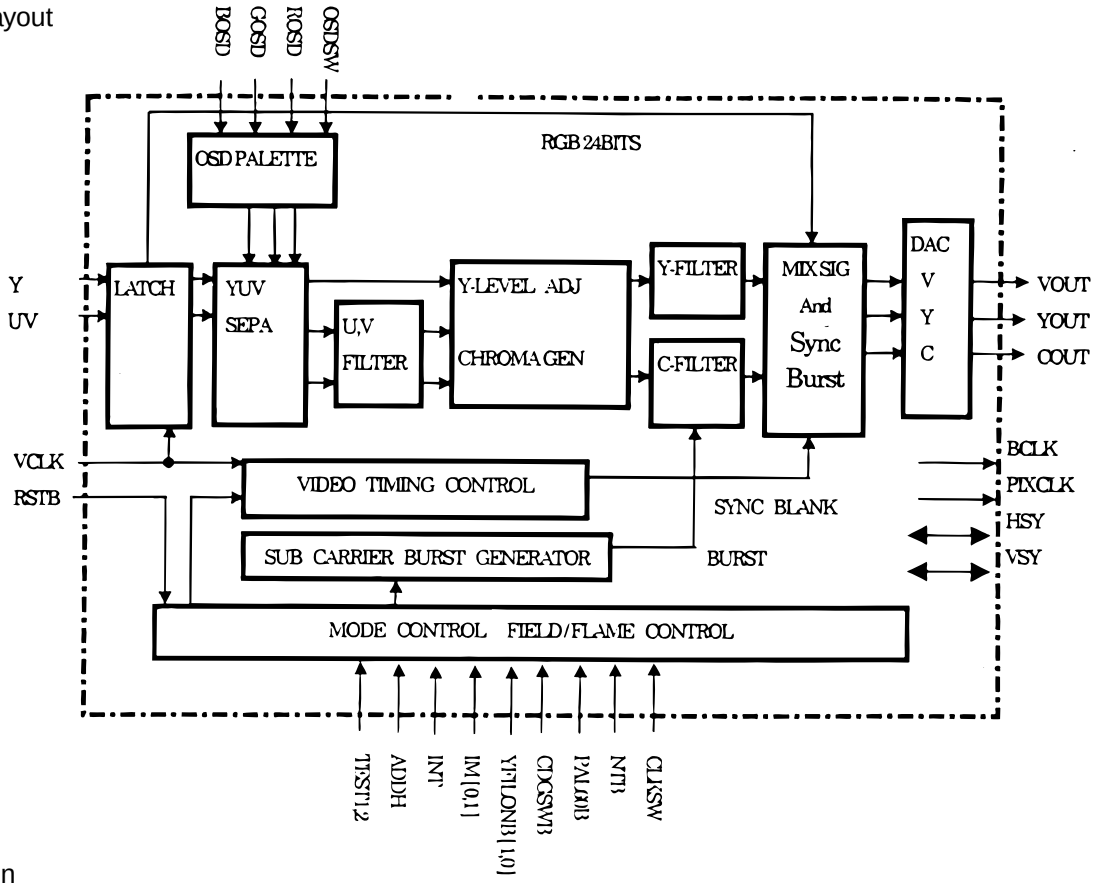

2. Pin function

No.	NAME	FUNCTION	No.	NAME	FUNCTION
1	BOSD	OSD BLUE DATA INPUT	33	SLABEB	SELECT MASTER/SLAVE
2	Y0/YUV0	YUV DATA	34	ADDH	+0.5/-0.5 LINE at NON-INTER
3	Y1/YUV1	YUV DATA	35	VREF-C	DAC BIAS
4	Y2/YUV2	YUV DATA	36	CGND	CHROMA OUTPUT GROUND
5	Y3/YUV3	YUV DATA	37	COUT	CHROMA OUTPUT
6	Y4/YUV4	YUV DATA	38	VGND	Composite Output Ground
7	Y5/YUV5	YUV DATA	39	VOUT	COMPOSITE OUTPUT
8	Y6/YUV6	YUV DATA	40	AVSS	Analog Ground (DAC, VREF)
9	GND	DIGITAL GROUND	41	P-VDD	POWER(DAC) VDD
10	Y7/YUV7	YUV DATA	42	IR	REFERENCE RESISTOR
11	UV0	UV DATA	43	AVDD	ANALOG (VREF) VDD
12	UV1	UV DATA	44	YGND	Luminance Output Ground
13	UV2	UV DATA	45	YOUT	Luminance Output
14	UV3	UV DATA	46	VDD	DIGITAL VDD
15	OSDSW	OSD ENABLE/DISABLE	47	YFILON2B	Y-FILSEL THROU/FILON2
16	CDGSWB	SELECT Video CD/CD-G	48	YCOFF	DAC(YOUT,COUT) OFF
17	UV4	UV DATA	49	YFILON1B	Y-FILSEL THROU/ FILON1
18	UV5	UV DATA	50	PAL60B	NORMAL/PAL60 at PALMODE
19	UV6	UV DATA	51	VCLK	Video Clock Input
20	UV7	UV DATA	52	RSTB	NORMAL/RESET
21	GND	DIGITAL GROND	53	CLKSW	SEL*1CLK/*2CLK
22	NTB	SELECT NISC/PAL MODE	54	RD0	Pull Down to GND
23	IM0	SELECT YUV/YUV	55	RD1	Pull Down to GND
24	IM1	SELECT DAC/NORMAL	56	RD2	Pull Down to GND
25	TEST1	Normally pull down to GND	57	ROSD	OSD RED DATA INPUT
26	TEST2	SELECT U/V TIMING	58	RD3	Pull Down to GND
27	VSY	V-SYNC INPUT or OUTPUT	59	BCLK/RD4	BASE CLOCK OUT
28	HSY	H-SYNC INPUT or OUTPUT	60	RD5	Pull Down to GND
29	PIXCLK	1/2 freq. of BCLK	61	IO VDD	VDD for I/O
30	VDD	DIGITAL VDD	62	RD6	Pull Down to GND
31	IO VDD	VDD for I/O	63	RD7	Pull Down to GND
32	INT	Interlace /Non-Interlace	64	GOSD	OSDGREEN DATA INPUT

* The pin built-in pull-down resister. (30kohm)

■ BU4094BCF (IC303,IC304) : Serial to parallel port extension

1.Pin layout

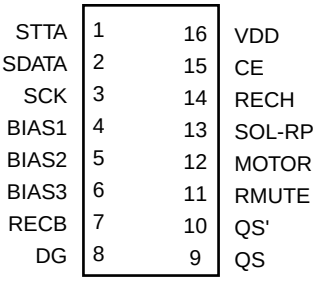

2.Block diagram

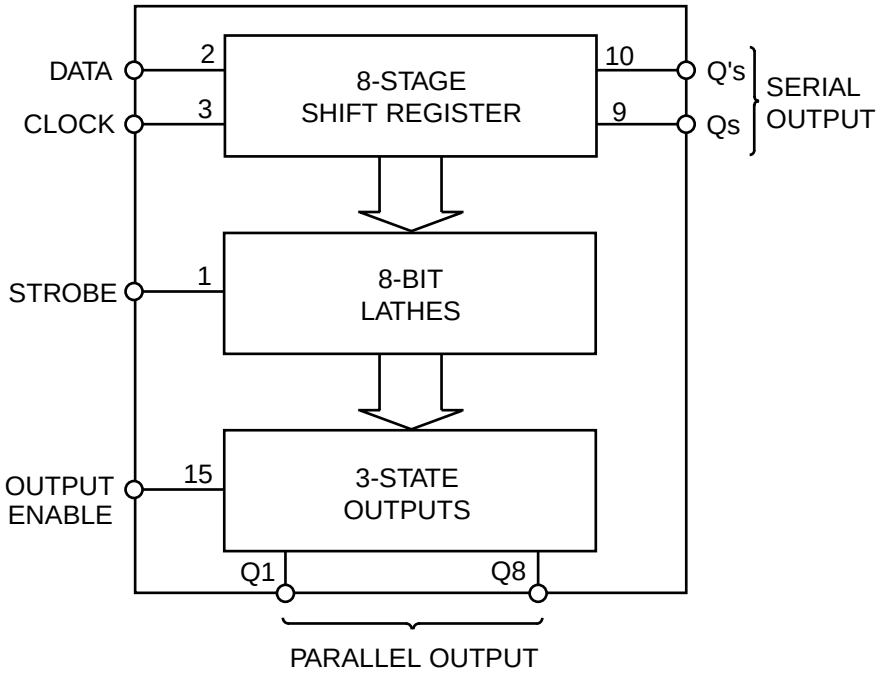

■ CL8830-PA1 (IC101) : MPEG Decoder & DSP

1. Pin layout

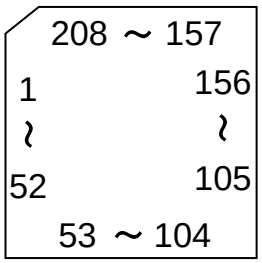

2. Block diagram

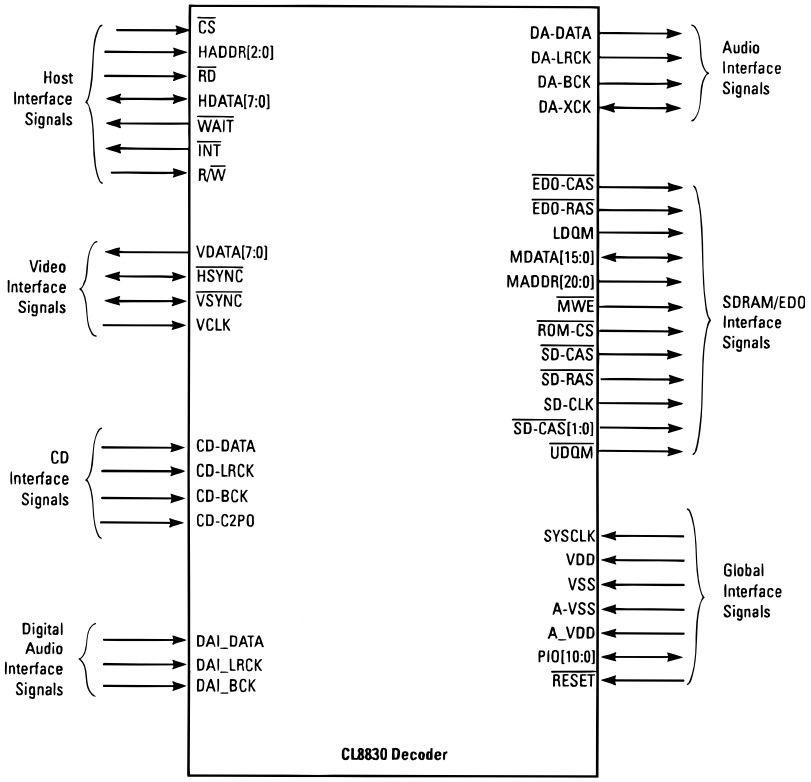

3.Pin function(1/2)

Pin No	Name	Symbol and I/O	Description
System Services			
13	$\overline{RESET}$	I	Hardware reset. An external device asserts $\overline{RESET}$ (active LOW) to execute a decoder hardware reset. To ensure proper initialization after power is stable, assert RESET for at least 20µs.
178	SYSCLK	I	System clock. Decoder requires an external 27 MHz TTL oscillator. Drive with the same 27-MHz as VCK.
190,174,156,153,147,141,138, 133,129,52,1	PIO[10:0]	I/O	Programmable I/O pins.
Power and Ground			
176	A- VDD	Analog Power	3.3-V analog supply voltage.
179	A- VSS	Analog Ground	Analog ground for PLL.
5,12,17,27,36,40,47,55,61,65, 69,75,81,87,91,95,101,107,113, 117,123,134,144,149,160,168, 175,181,193,197	VDD	Power	3.3-V supply voltage for core logic and I/O signals.
7,14,19,29,38,42,49,57,63,67, 71,77,83,89,93,97,103,109,115, 119,125,136,146,151,162,170, 183,195,199	VSS	Ground	Ground for core logic and I/O signals.
8-bit Host Interface			
206	$\overline{CS}$	I	Host chip select. Host asserts CS to select the decoder for a read or write operation. The falling edge of this signal triggers the read or write operation.
204-202	HADDR[2:0]	I	Host address bus. 3-bit address bus selects one of eight host interface registers.
11-8,6,4-2	HDAT[7:0]	I/O	8-bit bi-directional host data bus. Host writes data to the decoder Code FIFO via HDATA[7:0]. MSB of the 32-bit word is written first. The host also reads and writes the decoder internal registers and local SDRAM/ROM via HDAT[7:0].
16	$\overline{INT}$	O,OD,PU	Host interrupt. Open drain signal, must be pulled-up to 3.3 volts. Driven high for 10 ns before tristate.
208	$\overline{RD}$	I	Read strobe in I mode. Must be held HIGH in M Mode.
207	R/$\overline{W}$	I	Read/write strobe in M mode. Write strobe in I mode. Host asserts R/$\overline{W}$ LOW to select write and LOW to select Read.
15	$\overline{WAIT}$	O,OD,PU	Active LOW to indicate host initiated transfer is not complete. $\overline{WAIT}$ is asserted after the falling edge of $\overline{CS}$ and reasserted when decoder is ready to complete transfer cycle. Open drain signal, must be pulled-up to 3.3 volts. Driven high for 10 ns before tristate.
CD interface			
185	CD-C2PO	I	Asserted HIGH indicates a corrupted byte. Decoder keeps the previouse valid picture on-screen until the next valid picture is decoded.
184	CD-BCK	I	CD bit clock. Decoder accept multiple BCK rates.
182	CD-LRCK	I	Programmable polarity 16-bit word synchronization to the decoder (right channel HIGH).
180	CD-DATA	I	Serial CD data.

3.Pin function(2/2)

Pin No	Name	Symbol and I/O	Description
Video Output			
157	$\overline{\text{HSYNC}}$	I/O	Horizontal sync. The decoder begins outputting pixel data for a new horizontal line after the falling (active) edge of $\overline{\text{HSYNC}}$.
177	VCLK	I	Video clock. Clocks out data on input. VDATA[7:0]. Clock is typically 27 MHz.
155,154,152,150,148,145,143, 142	VDATA[7:0]	O	Video data bus. Byte serial CbYCrY data synchronous with VCLK. At power-up, the decoder does not drive VDATA. During boot-up, the decoder uses configuration parameters to drive or 3-state VDATA.
158	$\overline{\text{VSYNC}}$	I/O	Vertical sync. Bi-directional, the decoder outputs the top border of a new field on the first $\overline{\text{HSYNC}}$ after the falling edge of $\overline{\text{VSYNC}}$. $\overline{\text{VSYNC}}$ can accept vertical synchronization or top/bottom field notification from an external source. ($\overline{\text{VSYNC}}$ HIGH = bottom field. $\overline{\text{VSYNC}}$ LOW = Top field)
SDRAM/EDO/ROM interface			
92	$\overline{\text{EDO-CAS}}$	O	Active LOW EDO DRAM column address strobe.
94	$\overline{\text{EDO-RAS}}$	O	Active LOW EDO DRAM Row address strobe.
79	LDQM	O	SDRAM LDQM.
127,126,124,122-120,118,116, 114,112-110,108,106-104,102, 100-98,96	MADDR[20:0]	O	Memory address.
78,76,74-72,70,68,66,64,62,60-58,56,54,53	MDATA[15:0]	I/O	Memory data.
82	$\overline{\text{MWE}}$	O	SDRAM/EDO write enable. Decoder asserts active LOW to request a write operation to the SDRAM array.
128	$\overline{\text{ROM-CS}}$	O,OD,PU	ROM chip select. Open drain signal, must be pulled-up to 3.3 volts.
85	$\overline{\text{SD-CAS}}$	O	Active LOW SDRAM column address.
84	SD-CLK	O	SDRAM system clock.
88,90	$\overline{\text{SD-CS}}$[1:0]	O	Active LOW SDRAM bank select.
86	$\overline{\text{SD-RAS}}$	O	Active LOW SDRAM row address.
80	UDQM	O	SDRAM UDQM.
Audio interface			
167	DA-BCK	O	PCM bit clock. Divided by 8 from DA-XCK, DA-BCK can be either 48 or 32 times the sampling clock.
161	DA-DATA	O	Serial audio samples relative to DA-BCK clock.
166	DA-LRCK	O	PCM left-right clock. Identifies the channel for each audio sample. The polarity is programmable.
169	DA-XCK	I/O	Audio external frequency clock. Used to generate DA-BCK and DA-LRCK. DA-XCK can be either 384 or 256 times the sampling frequency.
173	DAI-BCK	I	PCM input bit clock.
171	DAI-DATA	I	PCM input data, two channels. Serial audio samples relative to DA-BCK clock, resulting in downmixed audio output.
172	DAI-LRCK	I	PCM input left-right clock.

1.I-input, O-output, OD-open drain, PU-requires external 4.7-kΩpull-up resistor.

■ LC72136N (IC2) : PLL frequency synthesizer

1. Pin layout

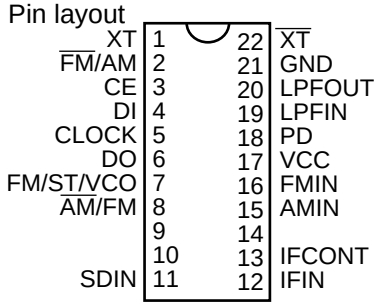

2. Block diagram

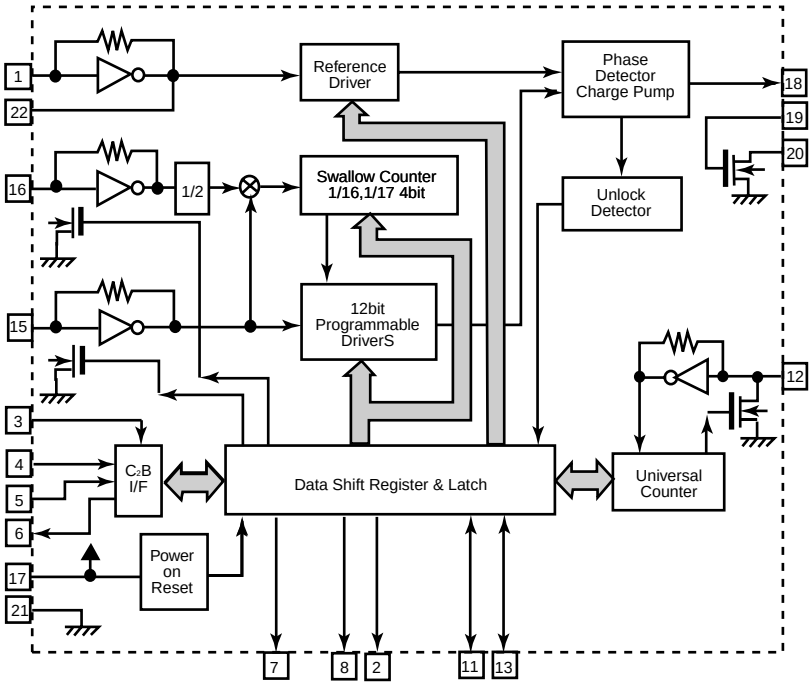

3. Pin function

Pin No.	Symbol	I/O	Function	Pin No.	Symbol	I/O	Function
1	XT	I	X'tal oscillator connect (75kHz)	12	IFIN	I	IF counter signal input
2	$\overline{\text{FM}}$/AM	O	LOW:FM mode	13	IFCONT	O	IF signal output
3	CE	I	When data output/input for 4pin(input) and 6pin(output): H	14		-	Not use
4	DI	I	Input for receive the serial data from controller	15	AMIN	I	AM Local OSC signal output
5	CLOCK	I	Sync signal input use	16	FMIN	I	FM Local OSC signal input
6	DO	O	Data output for Controller Output port	17	VCC	-	Power suplly(VDD=4.5-5.5V) When power ON:Reset circuit move
7	FM/ST/VCO	O	"Low": MW mode	18	PD	O	PLL charge pump output(H: Local OSC frequency Height than Reference frequency. L: Low Agreement: Height impedance)
8	$\overline{\text{AM}}$/FM	O	Open state after the power on reset	19	LPFIN	I	Input for active lowpassfilter of PLL
9	LW	I/O	Input/output port	20	LPFOUT	O	Output for active lowpassfilter of PLL
10	MW	I/O	Input/output port	21	GND	-	Connected to GND
11	SDIN	I/O	Data input/output	22	$\overline{\text{XT}}$	I	X'tal oscillator(75KHz)

■ LHMN4RN5-X (IC105) : 4MB micro code

1.Terminal layout

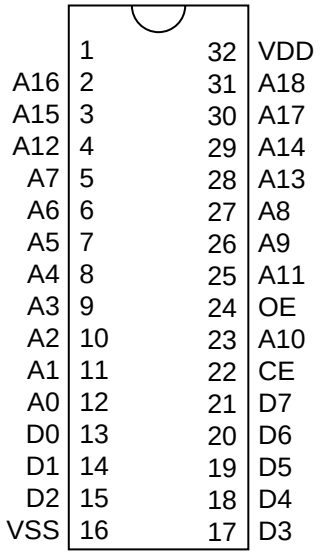

2.Block diagram

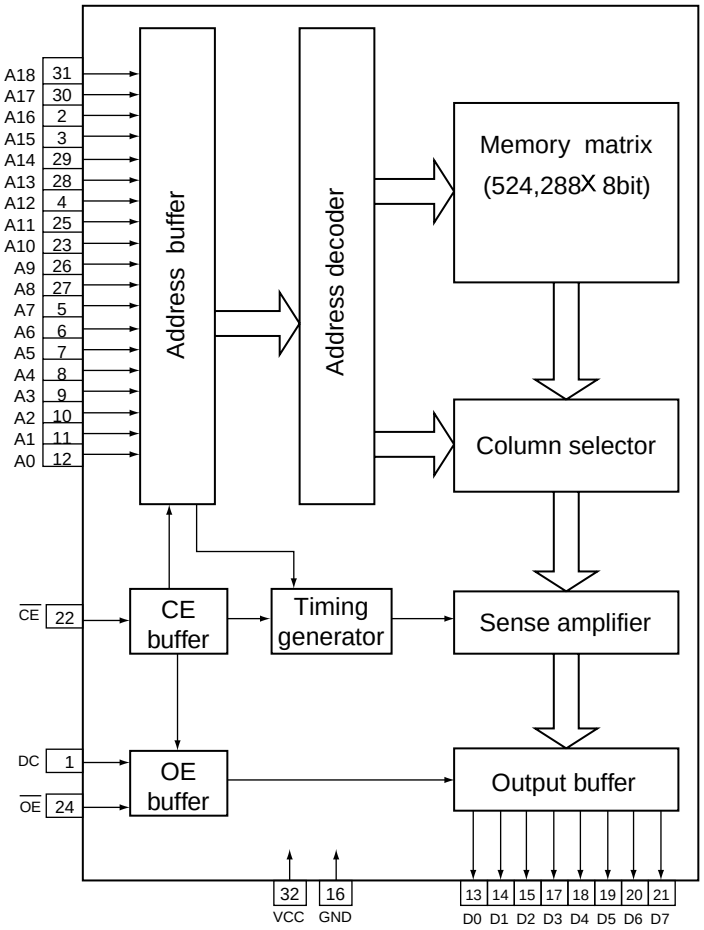

3.Pin function

Pin No.	Symbol	I/O	Description
1		-	Non connect
2,3	A16,A15	I	Address input
4	A12	I	Address input
5~12	A7~0	I	Address input
13~15	D0~2	O	Data output
16	VSS	-	Connect to GND
17~21	D3~7	O	Data output
22	CE	I	Chip enable input
23	A10	I	Address input
24	OE	I	Output enable input
25	A11	I	Address input
26,27	A9,8	I	Address input
28,29	A13,14	I	Address input
30,31	A17,18	I	Address input
32	VDD	-	Power supply

■UPD6461GS-635-X (IC151) : 16MB SDRAM

1.Pin layout

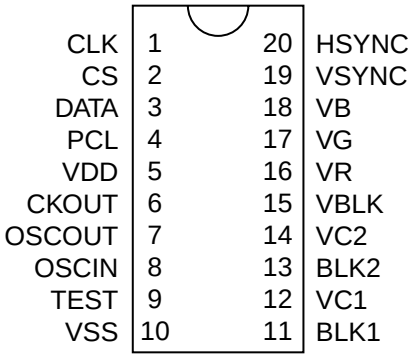

2.Pin function

Pin No.	Symbol	Description	Pin No.	Symbol	Description
1	CLK	Clock signal input	12	VC1	Non connect
2	CS	Chip select input	13	BLK2	Non connect
3	DATA	Serial data input	14	VC2	Non connect
4	PCL	Power ON clear	15	VBLK	Blanking signal output
5	VDD	Power supply	16	VR	Character signal output
6	CKOUT	Non connect	17	VG	Character signal output
7	OSCOUT	Non connect	18	VB	Character signal output
8	OSCIN	Oscillation terminal (output)	19	VSYNC	Vertical synchronizing signal input
9	TEST	Connect to GND			
10	VSS	Connect to GND	20	HSYNC	Horizontal synchronizing signal input
11	BLK1	Non connect			

■ MN101C35DEB (IC810) : System controller

Pin function (1/2)

Pin No.	Symbol	I/O	Function
1	KCMND	O	SVC3 Serial data output
2	MSTAT	I	SVC3 status input input
3	KCLK	I	SVC3 Serial clock input
4	DATAOUT	O	SLC/TUNER data output
5	DATAIN	I	TUNER data input
6	CK	O	SLC/TUNER clock
7	BEAT	O	Beat cut signal output of TUNER
8	VDD	-	Power supply +5V
9,10	OSC2,1	I/O	Oscillation terminal (8MHz)
11	VSS	-	Connect to GND
12,13	XI,XO	I/O	Sub clock (32.768kHz)
14	MMOD	-	Connect to GND
15	VREF-	-	Connect to GND
16~19	KEY1~4	I	Key matrix input 1~4
20	SLCKEY1	I	Tape B playback/recording detect switch
21	SLCKEY2	I	Tape B playback detect switch
22	SLCKEY3	I	Tape A playback detect switch
23	SPID	I	SPID IN
24	VREF+	I	AD port voltage reference
25	MRDY	I	VC3 Ready
26	RESET	I	Reset signal input
27	P OPEN	I	Rolling panel open detection signal input
28	P CLOSE	I	Rolling panel close detection signal input
29	VOLLED	O	LED Control signal output (VOL)
30	MSI	I	MS detector signal input
31	ECHO2	-	Echo ON/OFF(Not used)
32	ECHO1	-	Echo ON/OFF(Not used)
33	REMIN	I	Remote control signal input
34	PHOTOA	I	Tape A mechanism running detection signal input
35	PHOTOB	I	Tape B mechanism running detection signal input
36	INH	I	Inhibit signal input
37	RDSCLK	I	Clock signal input from IC3 (B/E/EN model)
38	PRT	I	Protector input
39	EXTCE	-	EXT IC Chip enable
40~41	BASSVOL+/-	I	Bass volume rotary encoder input(+/-)
42	RDS-DATA	I	RDS data input from IC3(B/E/EN model)
43	SPIA	-	SPI Control A
44	SPIB	-	SPI Control B
45,46	VOL+/-	I	Volume rotary encoder input (+/-)
47	MPX	I	Stereo detect
48	FVOLDA	O	Front volume data output
49	VOLCLK	O	Clock sibnal output to IC436
50	BASSLED	O	LED Control signal output (BASS)

Pin function (2/2)

Pin No.	Symbol	I/O	Function
51~63	G13~G1	O	FL grid control signal output
64~87	P1~P24	O	FL segment control signal output
88	SLCCE	O	SLC Chip enable signal output to IC303,IC304
89	AUX LED	O	LED Control signal output (AUX)
90	DOORCL	O	Rolling panel motor control signal output
91	DOOR OPEN	O	Rolling panel motor control signal output
92	CDLED	O	LED Control signal output (CD)
93	TAPE LED	O	LED Control signal output (TAPE)
94	TU LED	O	LED Control signal output (TUNER)
95	SMUTE	O	System mute control signal output
96	BTU+	O	Tuner supply control
97	POUT	O	Power ON/OFF
98	TUCE	O	TUNER Chip enable signal output
99	VC3RESET	O	VC3 reset output
100	VPP	-	Power supply

■ MN102L490A (IC103) : VCD Host micom

1.Pin layout

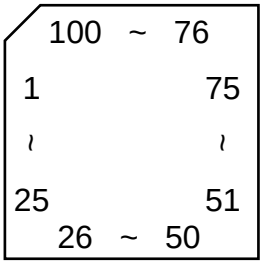

2.Pin function

Pin No.	Symbol	I/O	Description	Pin No.	Symbol	I/O	Description
1	DVDWAIT	I	Wait signal input from IC106	55~57		-	Non connect
				58	ENCRST	O	Reset signal output to IC152
2	OE	I	Read Enable input	59	PAL60	O	Normal PAL60 at PAL mode
3		-	Non connect	60	N/PAL	O	Select NTSC/PAL mode
4	WE	O	Write enable signal output	61	VSS	-	Connect to ground
5	ROMCS	O	Chip select signal output (ROM)	62		-	Non connect
				63	VCDEMP	-	Non connect
6		-	Non connect	64	HREQ	O	Request signal output to IC251
7	RAMCS	-	Non connect				
8	DVDCS	O	Chip select signal output (AV decoder)	65	HRDY	O	Ready signal output to IC251
				66	VDD	-	Power supply
9	BREQ	-	Power supply	67	SRCLK	I	Data clock input
10	DVDRST	O	Reset signal output to IC101	68	M2HDAT	I	Mecha to host micom data port
11		-	Non connect				
12	WORD	-	Connect to ground	69	H2MDAT	O	Host to mecha micom data port
13~16	HA0~3	O	Host address bus terminal				
17	VDD	-	Power supply	70	SBT1	-	Power supply
18	SYSCLK	-	Non connect	71	SBI1	-	Connect to ground
19	VSS	-	Connect to ground	72	SBO1	-	Non connect
20	XI	-	Connect to ground	73		-	Pull up
21	XO	-	Non connect	74		-	Pull up
22	VDD	-	Power supply	75		-	Power supply
23	OSCI	I	Oscillation terminal(1MHz)	76	MREQ	I	Request signal input from IC251
24	OSCO	O	Oscillation terminal(1MHz)				
25	MODE	-	Connect to ground	77		-	Non connect
26~33	HA4~11	O	Host address bus terminal	78	DVDINT	I	Interrupt from AV decoder
34	VDD	-	Power supply	79,80		-	Non connect
35~41	HA12~18	O	Host address bus terminal	81	ADSEP	-	Power supply
42	HA19	-	Non connect	82	RESET	I	Reset signal input
43	VSS	-	Connect to ground	83	VDD	-	Power supply
44~47	HA20~23	-	Non connect	84~91		-	Non connect
48~53		-	Non connect	92	VSS	-	Connect to ground
54	VDD	-	Power supply	93~100	HD0~7	I/O	Host data bus terminal

-MEMO-

Block diagrams

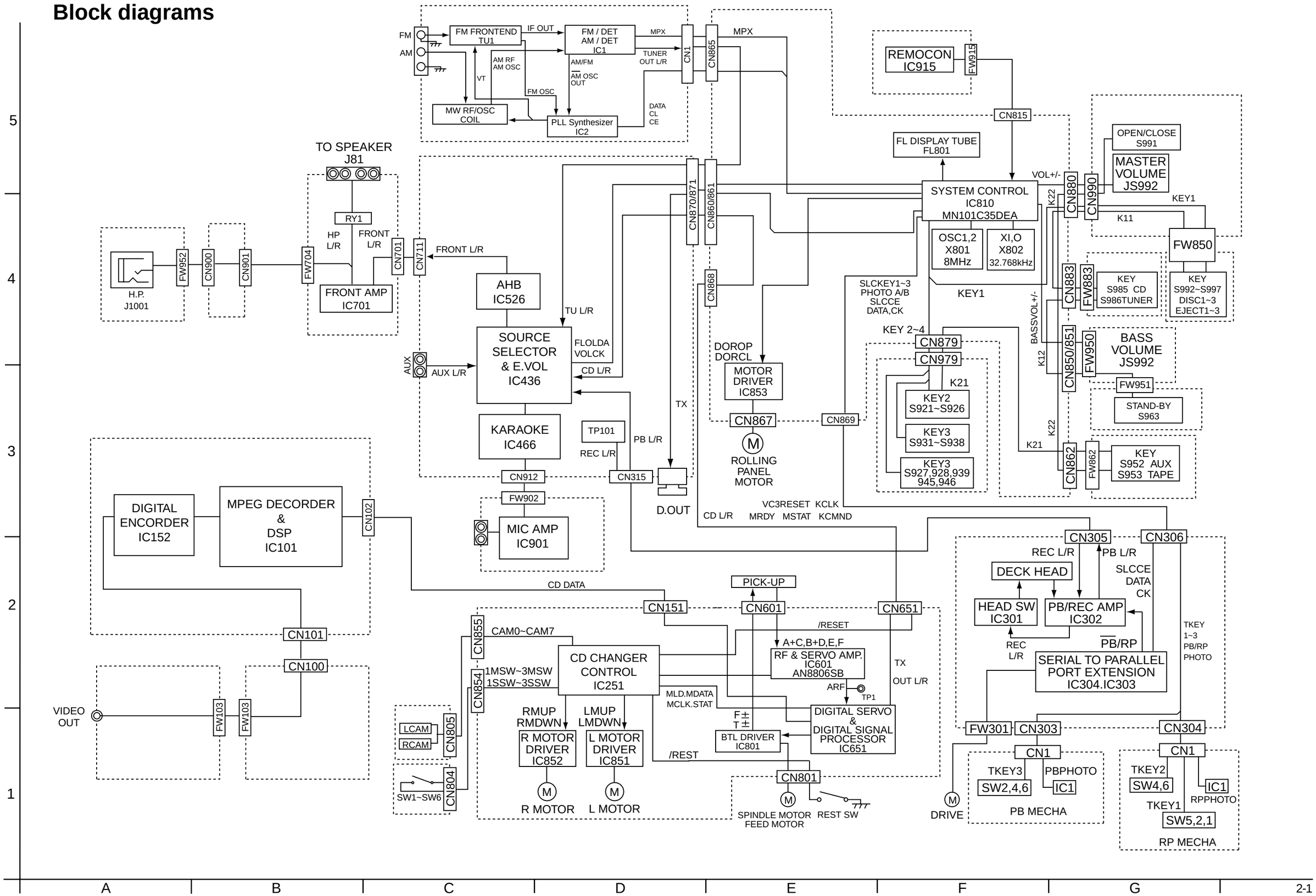

Standard schematic diagrams

■ Power transformer section

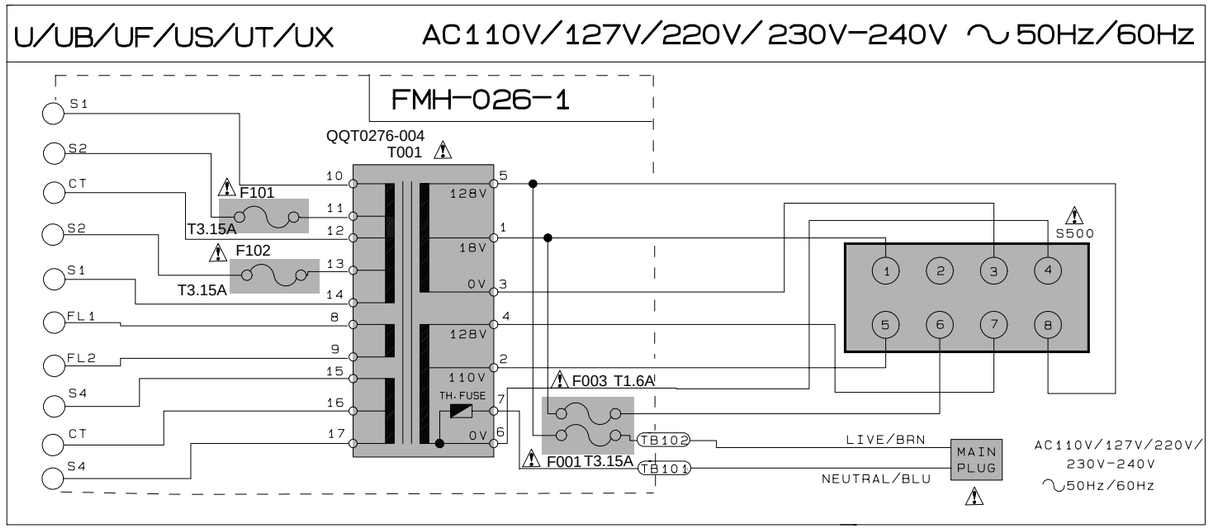

VOLTAGE SELECTOR LOCATION

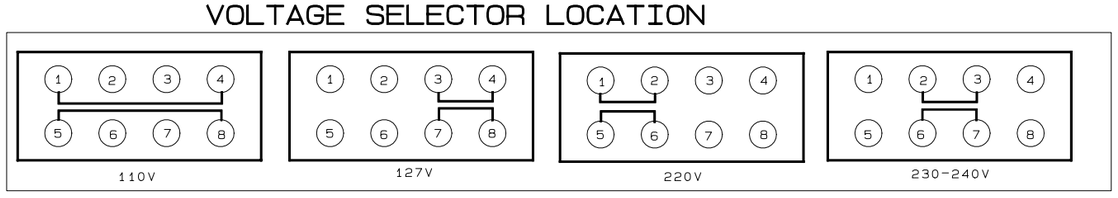

EXPLANATION OF OVERALL SCHEMATIC	
MODEL	MX-J570V/MX-J680V

SHEET NUMBER	CIRCUITS DESCRIPTION
1/10	·PRIMARY WITH MAINS TRANSFORMER
2/10	·DC REGULATORS/AUDIO OUTPUT
3/10	·EXTERNAL INPUT, SOURCE SELECTOR SWITCH
4/10	·FL DISPLAY, SYSTEM CONTROL LSI, USER CONTROL KEYS
5/10	·MIC AMP, ECHO CIRCUIT
6/10	·SVCD SERVO AND SVCD SYSTEM CONTROL ·SVCD CHANGER MECHANISM CONTOL
7/10	·TAPE DECK MECHANISM CONTROL ·TAPE CIRCUITS SUCH AS PRE-AMP AND BIAS
8/10	·TUNER RF/IF/FM MULTIPLEX
9/10	·SVCD REGULATORS
10/10	·SUPER VCD CONTROL CIRCUIT

NOTE: MARK (*) IS TO SHOW DEVIATION IN VERSIONS
DETAILS ARE EXPLAINED BY MARK.

VERSION CODES

UB :HONG KONG
UT :TAIWAN
UX :SAUDI ARABIA
US :SINGAPORE AND UNIVERSAL
EXCEPT ALL OF ABOVES

⚠ Parts are safety assurance parts.
When replacing those parts make
sure to use the specified.

SHEET 1/10

■ Power amplifier & regulator section

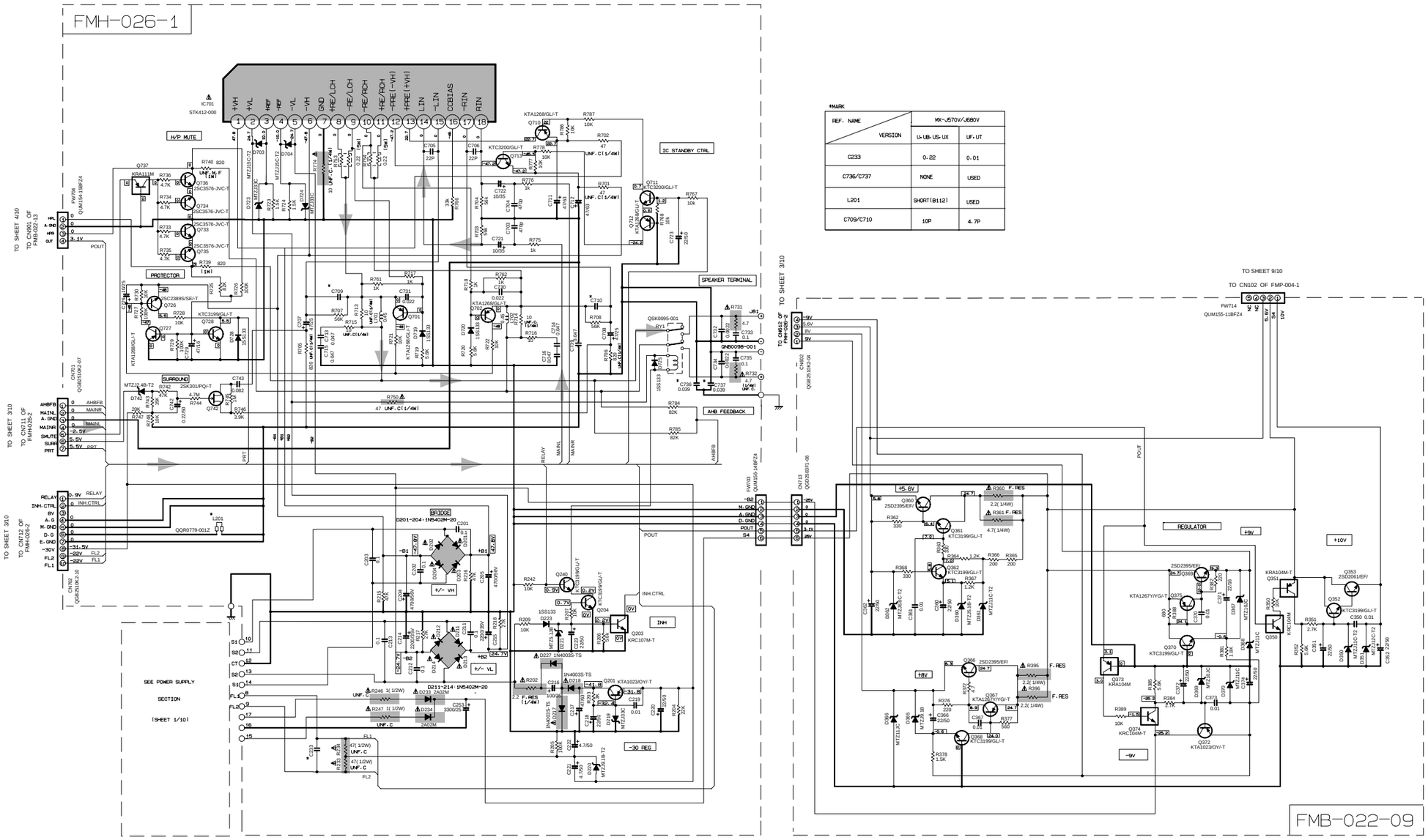

#MARK

REF. NAME / VERSION	MX-J570V/J680V	
	U-UB-US-UX	UF-UT
C233	0.22	0.01
C736/C737	NONE	USED
L201	SHORT(B112)	USED
C709/C710	10P	4.7P

NOTES

1. VOLTAGES ARE DC-MEASURED WITH A DIGITAL VOLT METER OR OSCILLOSCOPE WITHOUT INPUT SIGNAL.
   CONDITION — AUX MODE, VOL MIN, BASS OFF
2. UNLESS OTHERWISE SPECIFIED
   RESISTORS ARE 1/4W ±5% CARBON RESISTOR.
   ALL RESISTANCE VALUES ARE IN OHM(Ω).
   ALL CAPACITORS ARE CERAMIC CAPACITOR OR MYLAR CAPACITOR.
   ALL CAPACITANCE VALUES ARE IN μF(F=μF).
   ALL INDUCTANCE VALUES ARE IN μH(H=mH).
   ALL E-CAPACITORS ARE SHOWN IN THE FORM OF CAPACITANCE (μF)/RATED VOLTAGE (V).
   ALL DIODES ARE 1SS133

⚠ Parts are safety assurance parts.
When replacing those parts make sure to use the specified.

MAIN signal

■ Function & Main amplifier section

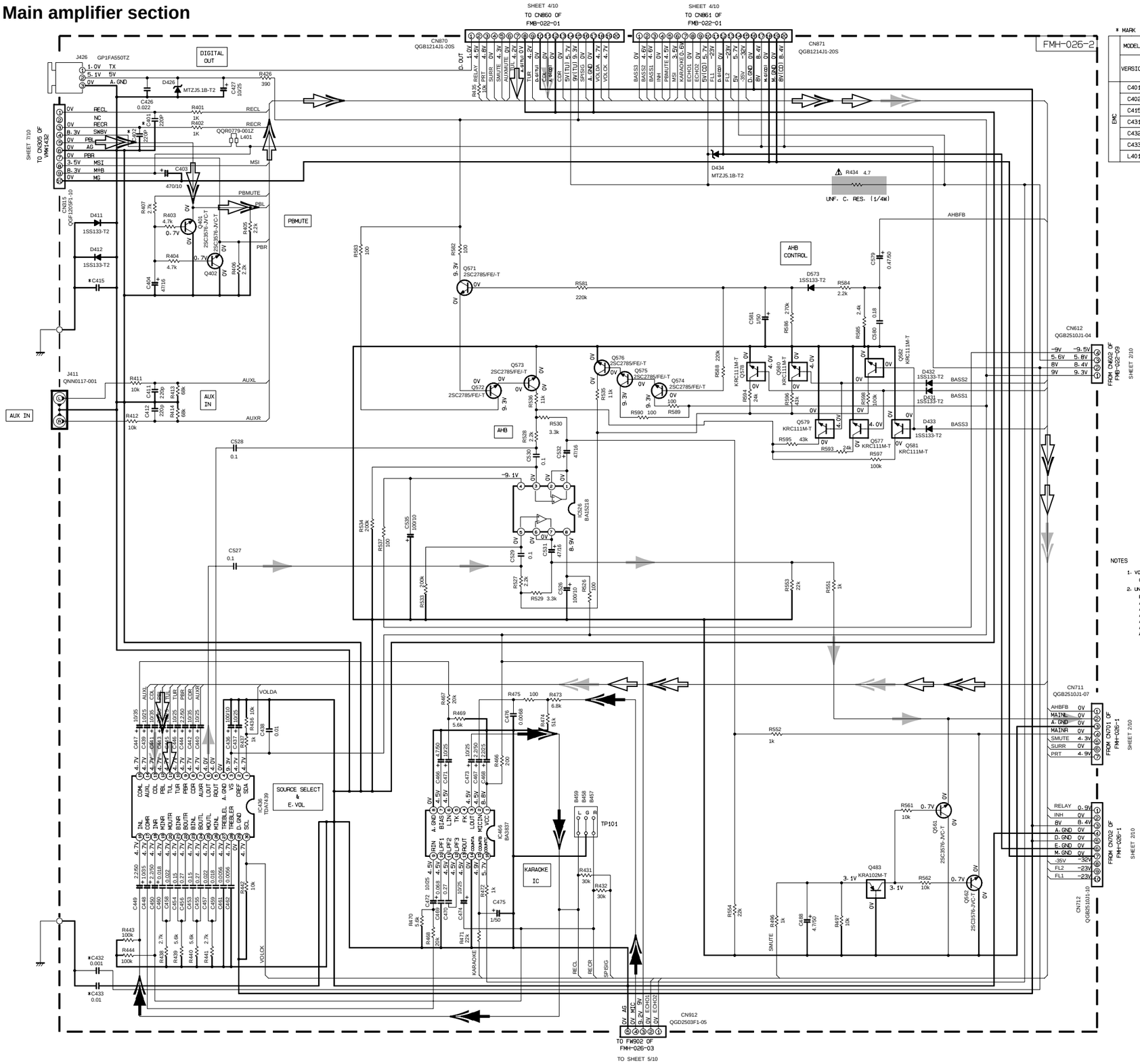

* MARK

	MODEL	MX-J570V		MX-J680V	
	VERSION	UB·US·UX	UT	US	UF·UT
EMC	C401	NONE	USED	NONE	USED
	C402	NONE	USED	NONE	USED
	C415	1000p	0.0022	1000p	0.0022
	C431	NONE	USED	NONE	USED
	C432	NONE	USED	NONE	USED
	C433	NONE	USED	NONE	USED
	L401	NONE	USED	NONE	USED

NOTES

1. VOLTAGES ARE DC-MEASURED WITH A DIGITAL VOLT METER OR OSCILLOSCOPE WITHOUT INPUT SIGNAL.
   CONDITION —— AUX MODE· VOL MIN· BASS OFF
2. UNLESS OTHERWISE SPECIFIED
   RESISTORS ARE 1/4W ±5% CARBON RESISTOR.
   ALL RESISTANCE VALUES ARE IN OHM(Ω).
   ALL CAPACITORS ARE CERAMIC CAPACITOR OR MYLAR CAPACITOR.
   ALL CAPACITANCE VALUES ARE IN #F(P=pF).
   ALL INDUCTANCE VALUES ARE IN #H(m=mH).
   ALL E·CAPACITORS ARE SHOWN IN THE FORM OF CAPACITANCE (#F)/RATED VOLTAGE (V).
   ALL DIODES ARE 1SS133

⚠ Parts are safety assurance parts. When replacing those parts make sure to use the specified.

CD signal
TAPE P.B. signal
TUNER signal
MAIN signal
MIC signal

SHEET 3/10

■ FL Display & system controller section

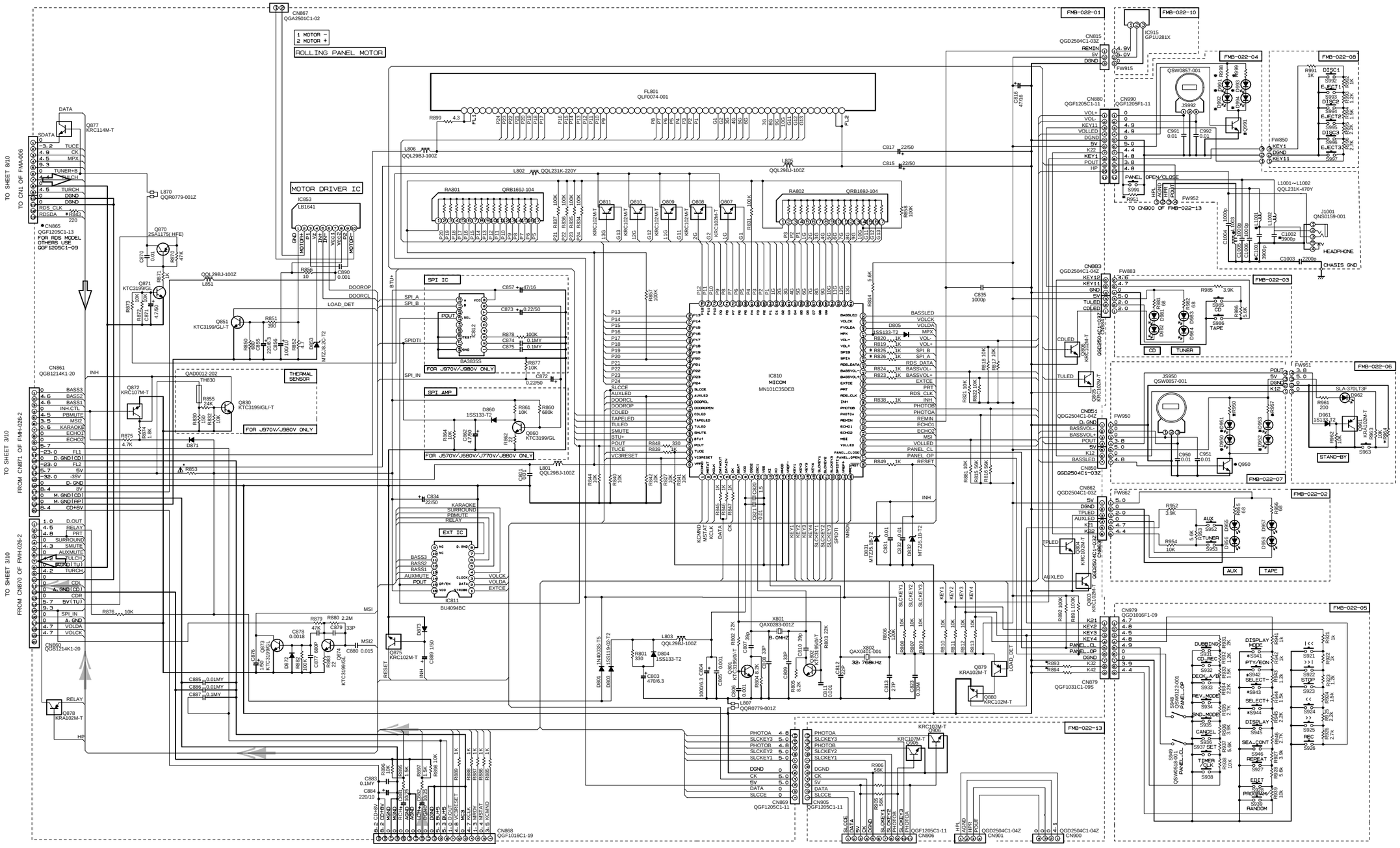

* MARK

	MX-J570V UB, US, UX,	MX-J570V UT,	MX-J680V US	MX-J680V UF, UT	CA-MXJ770V UB, US, UX	CA-MXJ880V US	CA-MXJ880V UF, UT	CA-MXJ970V UB, US, UX	CA-MXJ980V US	CA-MXJ980V UF, UT
R825, 826	NONE	NONE	NONE	NONE	NONE	NONE	NONE	1K	1K	1K
R864	330K	330K	330K	330K	75K	75K	75K	18K	18K	18K
R951	18K	18K	18K	18K	18K	18K	18K	18K	18K	18K
R893	75K(UX=18K)	75K	75K	75K	75K(UX=18K)	75K	75K	75K(UX=18K)	75K	75K
R894	330K(UX=18K)	330K	330K	330K	330K(UX=18K)	330K	330K	330K(UX=18K)	330K	330K
D950, D992 D951, D991	NONE	NONE	NONE	NONE	NONE	NONE	NONE	SLA-570JT3F	SLA-570JT3F	SLA-570JT3F
D952, D994 D953, D993	NONE	NONE	NONE	NONE	NONE	NONE	NONE	SLA-570JT3F	SLA-570JT3F	SLA-570JT3F
R950, R957, R998, R999	NONE	NONE	NONE	NONE	NONE	NONE	NONE	75	75	75
Q950, Q991	NONE	NONE	NONE	NONE	NONE	NONE	NONE	KRC-102M-T	KRC-102M-T	KRC-102M-T
X801	QAX0416-001Z	QAX0416-001Z	QAX0416-001Z	QAX0416-001Z	QAX0416-001Z	QAX0416-001Z	QAX0416-001Z	QAX0283-001Z	QAX0283-001Z	QAX0283-001Z
L1001, L1002	SHORT	QQL231K-470Y	SHORT	QQL231K-470Y	SHORT	SHORT	QQL231K-470Y	SHORT	SHORT	QQL231K-470Y
C1001, C1002	NONE	0.001u	NONE	0.001u	NONE	NONE	0.001u	0.001u	NONE	0.001u
L1003	QQL231K-2R2Y	QQR0779-001Z	QQL231K-2R2Y	QQR0779-001Z	QQL231K-2R2Y	QQL231K-2R2Y	QQR0779-001Z	QQL231K-2R2Y	QQL231K-2R2Y	QQR0779-001Z
R853	2.2 F.RES (1/4W)	2.2 F.RES (1/4W)	2.2 F.RES (1/4W)	2.2 F.RES (1/4W)	2.2 F.RES (1/4W)	2.2 F.RES (1/4W)	2.2 F.RES (1/4W)	ICP-N15-T	ICP-N15-T	ICP-N15-T

NOTES

1. VOLTAGES ARE DC-MEASURED WITH A DIGITAL VOLT METER OR OSCILLOSCOPE WITHOUT INPUT SIGNAL.
   CONDITION — AUX MODE: VOL MIN BASS OFF
2. UNLESS OTHERWISE SPECIFIED
   RESISTORS ARE 1/4W ± 5% CARBON RESISTOR.
   ALL RESISTANCE VALUES ARE IN OHM Ω.
   ALL CAPACITORS ARE CERAMIC CAPACITOR OR MYLAR CAPACITOR.
   ALL CAPACITANCE VALUES ARE IN μF(P=μμF).
   ALL INDUCTANCE VALUES ARE IN ㎐=㎐.
   ALL E.CAPACITORS ARE SHOWN IN THE FORM OF CAPACITANCE (μF)/RATED VOLTAGE (V).
   ALL DIODES ARE 1SS133

SHEET 4/10

■ Microphone amplifier section

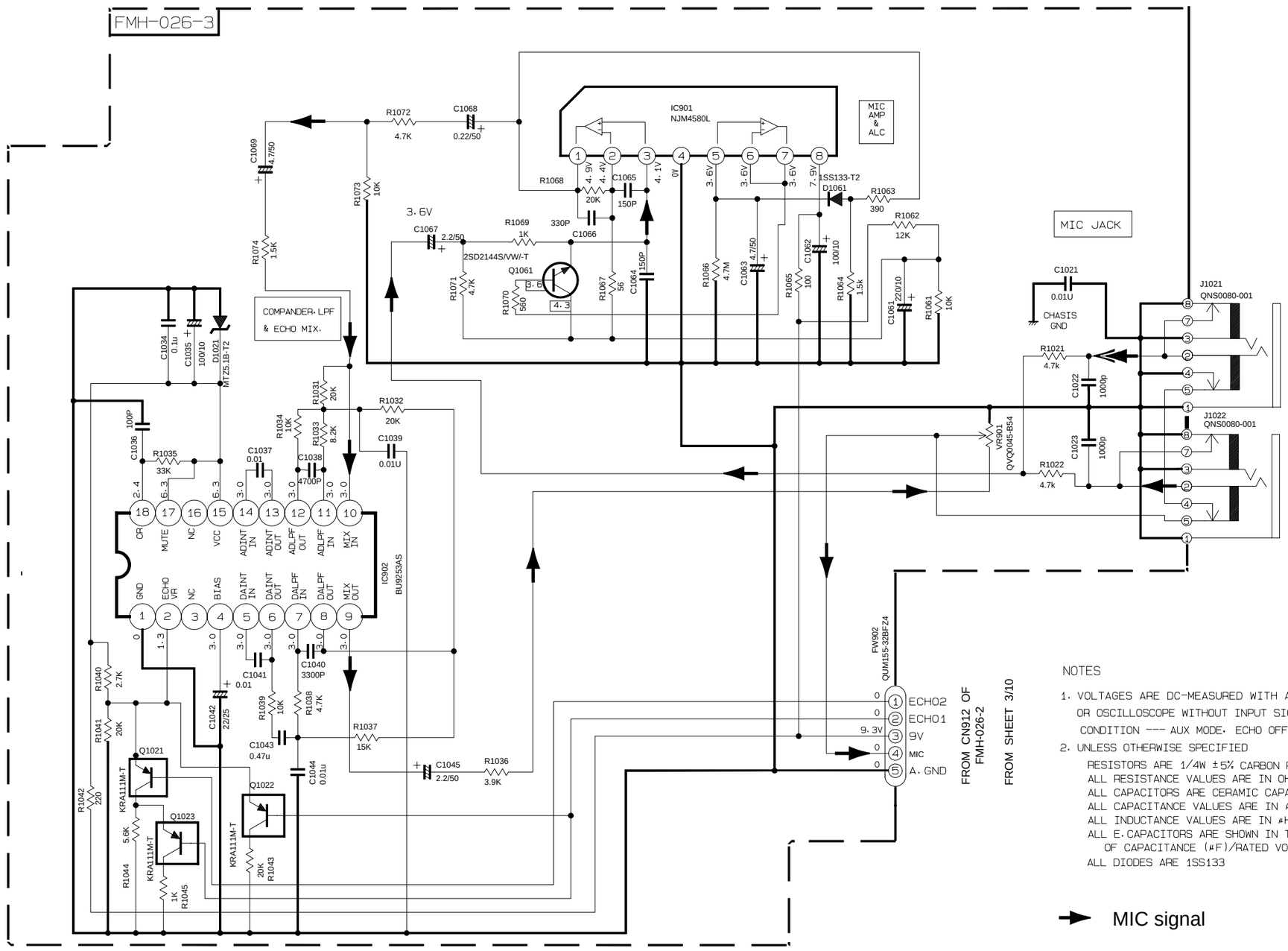

NOTES

1. VOLTAGES ARE DC-MEASURED WITH A DIGITAL VOLT METER OR OSCILLOSCOPE WITHOUT INPUT SIGNAL.
   CONDITION --- AUX MODE, ECHO OFF
2. UNLESS OTHERWISE SPECIFIED
   RESISTORS ARE 1/4W ±5% CARBON RESISTOR.
   ALL RESISTANCE VALUES ARE IN OHM(Ω).
   ALL CAPACITORS ARE CERAMIC CAPACITOR OR MYLAR CAPACITOR.
   ALL CAPACITANCE VALUES ARE IN μF(P=pF).
   ALL INDUCTANCE VALUES ARE IN μH(m=mH).
   ALL E.CAPACITORS ARE SHOWN IN THE FORM OF CAPACITANCE (μF)/RATED VOLTAGE (V).
   ALL DIODES ARE 1SS133

■ CD Servo & CD Mechanism control section

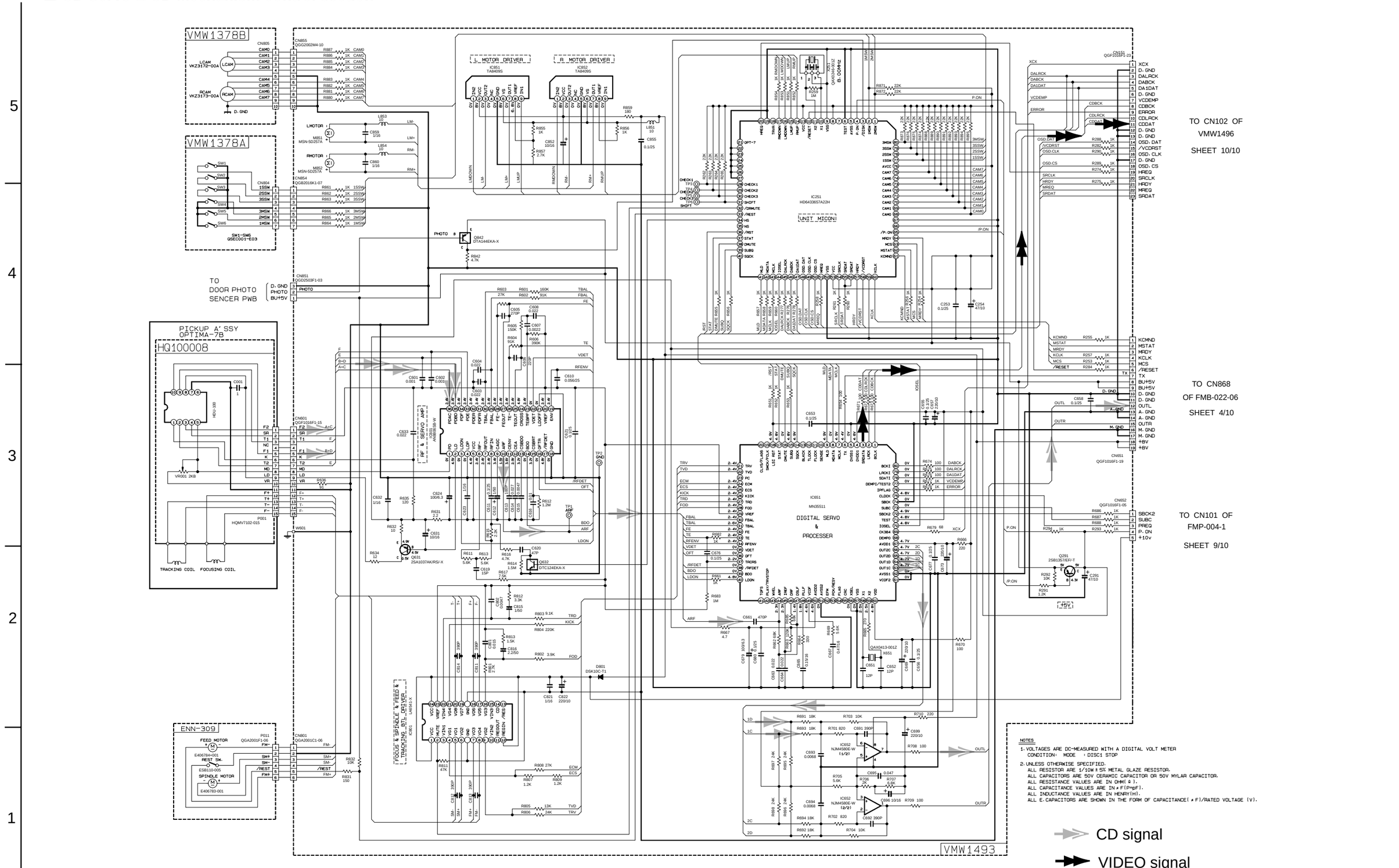

SHEET 6/10

■ Head amplifier & mechanism cotntrol section

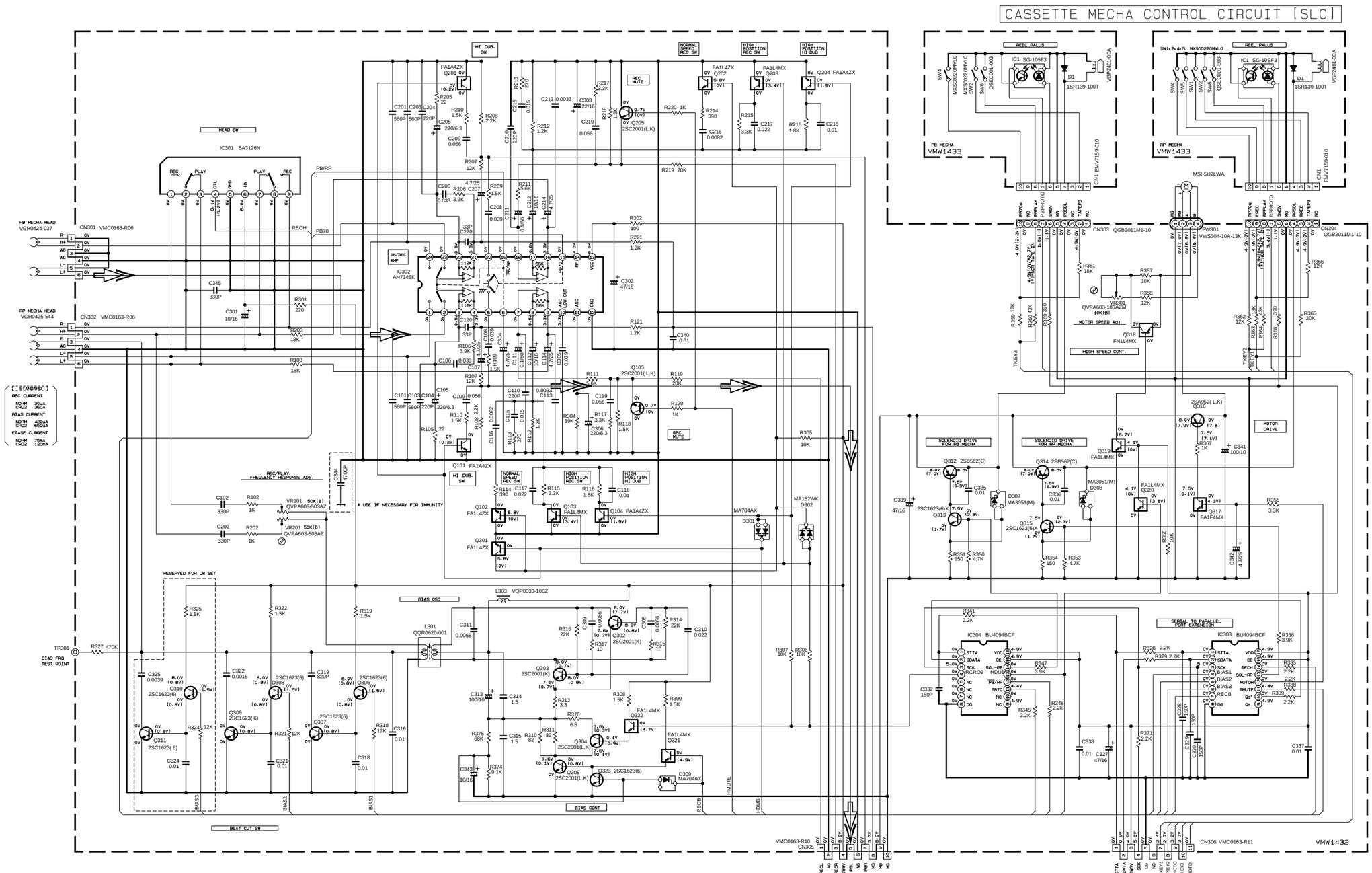

NOTES

1. VOLTAGES ARE DC-MEASURED WITH A DIGITAL VOLT METER OR OSCILLOSCOPE WITHOUT INPUT SIGNAL. ( ) IS INVERT MODE
2. UNLESS OTHERWISE SPECIFIED
   ALL RESISTANCE VALUES ARE IN OHM(Ω).
   ALL CAPACITORS ARE CERAMIC CAPACITOR
   ALL CAPACITANCE VALUES ARE IN μF(P=pF).
   ALL INDUCTANCE VALUES ARE IN μH(m=mH).
   ALL E-CAPACITORS ARE SHOWN IN THE FORM OF CAPACITANCE (μF1)/RATED VOLTAGE (V).
   PP PLYPROPYLENE CAPACITOR

TABLE 1·DIGITAL TR LIST

PART·NO	CONSTRVCTION	REF·NO			
FN1L4M	47K 47K	Q318	FA1F4M	22K 22K	Q317
FA1A4Z	10K	Q101/Q201 Q104/Q204	FA1L4M	47K 47K	Q103/Q203 Q319 Q320/Q321/Q322
FA1L4Z	47K	Q102/Q202 Q301			

SHEET 7/10

■ Tuner section

⚠ Parts are safety assurance parts. When replacing those parts make sure to use the specified.

NOTES

1. VOLTAGES ARE DC-MEASURED WITH A DIGITAL VOLT METER.
2. ALL RESISTORS ARE 1/8W ±5% METAL GLAZE RESISTOR.
3. ALL RESISTANCE VALUES ARE IN OHM(Ω).
4. ALL CAPASITANCE VALUES ARE IN μF(P=pF).
5. ALL E.CAPASITORS ARE SHOWN IN THE FORM OF CAPASITANCE (μF)/RATED VOLTAGE (V).
6. SI DIODES (▶) ARE ALL 1SS133-T THAT CAN BE CHANGED TO SIMILAR DIODE SUCH AS MA165 OR HSS104J.
7. PARTS NO. OF TRANSISTORS ARE AS FOLLOWS.
   Q1 2SC2814/4-5/-X Q2,Q3 2SC2412K/R/-X
   Q4,Q5 DTA114YKA-X
8. INSIDE OF DIGITAL TRANSISTORS ARE SHOWN AS FOLLOWS.

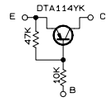

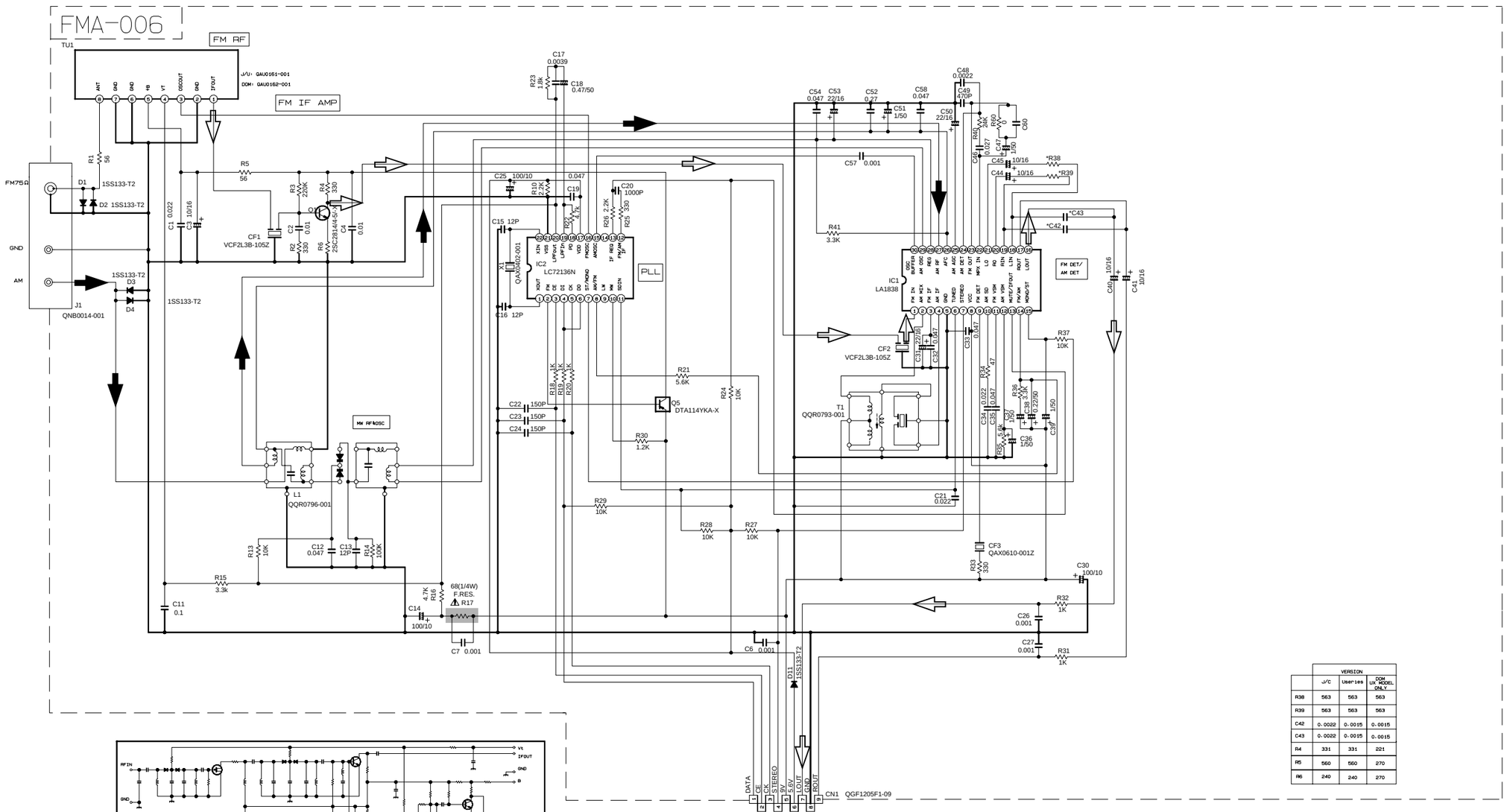

	VERSION		
	J/C	Useries	DOM LH MODEL ONLY
R38	563	563	563
R39	563	563	563
C42	0.0022	0.0015	0.0015
C43	0.0022	0.0015	0.0015
R4	331	331	221
R5	560	560	270
R6	240	240	270

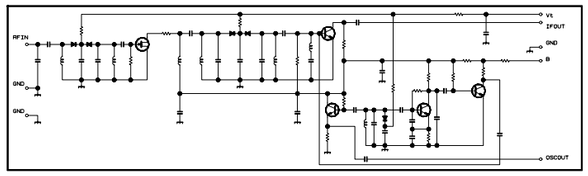

	CONDITION PIN NO.	1	2	3	4	5	6	7	8	9	10	11	12	13	14	15	16	17	18	19	20	21	22	23	24	25	26	27	28	29	30
IC1	FM NO SIGNAL	3.6	8.9	3.6	3.6	0	5.0	5.0	8.9	8.9	1.3	0.1	0	0.9	7.8	7.8	4.3	4.3	4.3	4.3	3.4	3.4	2.8	3.4	0	0	3.5	3.5	3.6	3.6	2.7
	FM 60dB STEREO	3.6	8.9	3.6	3.6	0	0	5.0	8.9	8.9	1.3	4.3	0	0.9	7.8	7.8	4.3	4.3	4.3	4.3	3.4	3.4	2.8	3.4	0	0	3.6	3.6	3.6	3.6	2.7
	AM NO SIGNAL	3.5	9.0	3.5	3.5	0	5.0	5.1	9.0	2.6	1.3	0	0	0.9	4.7	5.5	4.3	4.3	4.3	4.3	3.3	3.2	2.8	ust	0.7	0.7	3.6	3.6	3.6	3.6	2.1
IC2	FM NO SIGNAL	2.5	0	0	5.0	4.9	5.0	7.9	7.8	3.6	6.1	5.1	0	0	0	0	2.5	5.1	0.9	0.9	3.8	0	2.3								

Tr NO.	Q1			Q5					
PIN NO.	E	C	B	E	C	B			
FM 87.5MHz NO SIGNAL	0	7.1	0.85	8.9	8.8	0			
AM 522KHz NO SIGNAL	0	0	0	9.0	0	8.9			
Tr NO.	Q2			Q3			Q4		
PIN NO.	E	C	B	E	C	B	E	C	B
AM 522KHz NO SIGNAL	0	0	0.7	0	0	0.7	0	3.6	0.7
AM 144KHz NO SIGNAL	0	0	0.3	0	0.3	0.3	3.6	3.6	3.6

⇨ FM / TUNER signal

➡ AM signal

SHEET 8/10

■ Video CD regulator section

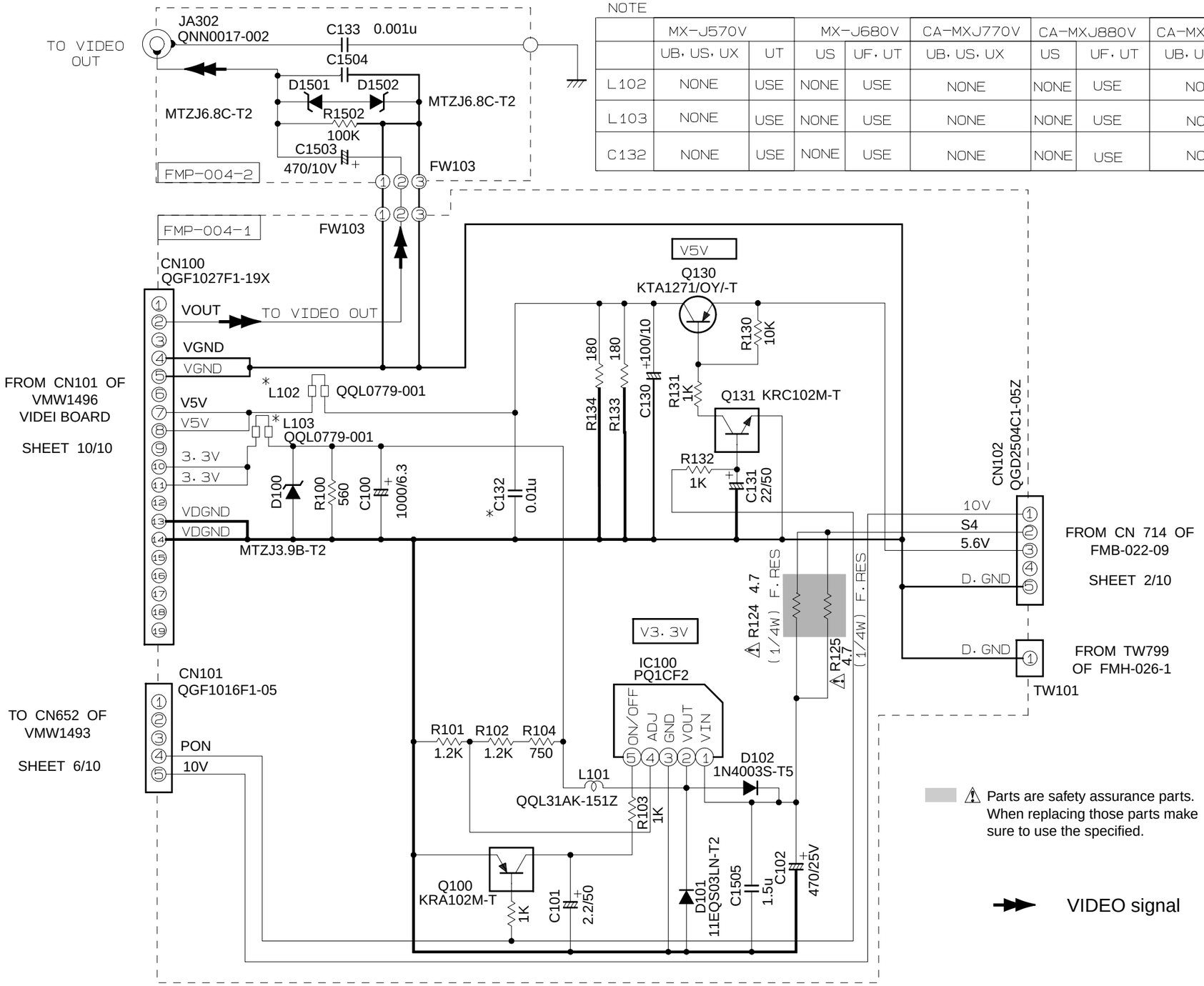

* NOTE

	MX-J570V		MX-J680V		CA-MXJ770V	CA-MXJ880V		CA-MXJ970V	CA-MXJ980V	
	UB, US, UX	UT	US	UF, UT	UB, US, UX	US	UF, UT	UB, US, UX	US	UF, UT
L102	NONE	USE	NONE	USE	NONE	NONE	USE	NONE	NONE	USE
L103	NONE	USE	NONE	USE	NONE	NONE	USE	NONE	NONE	USE
C132	NONE	USE	NONE	USE	NONE	NONE	USE	NONE	NONE	USE

SHEET 9/10

■ Super VCD control section

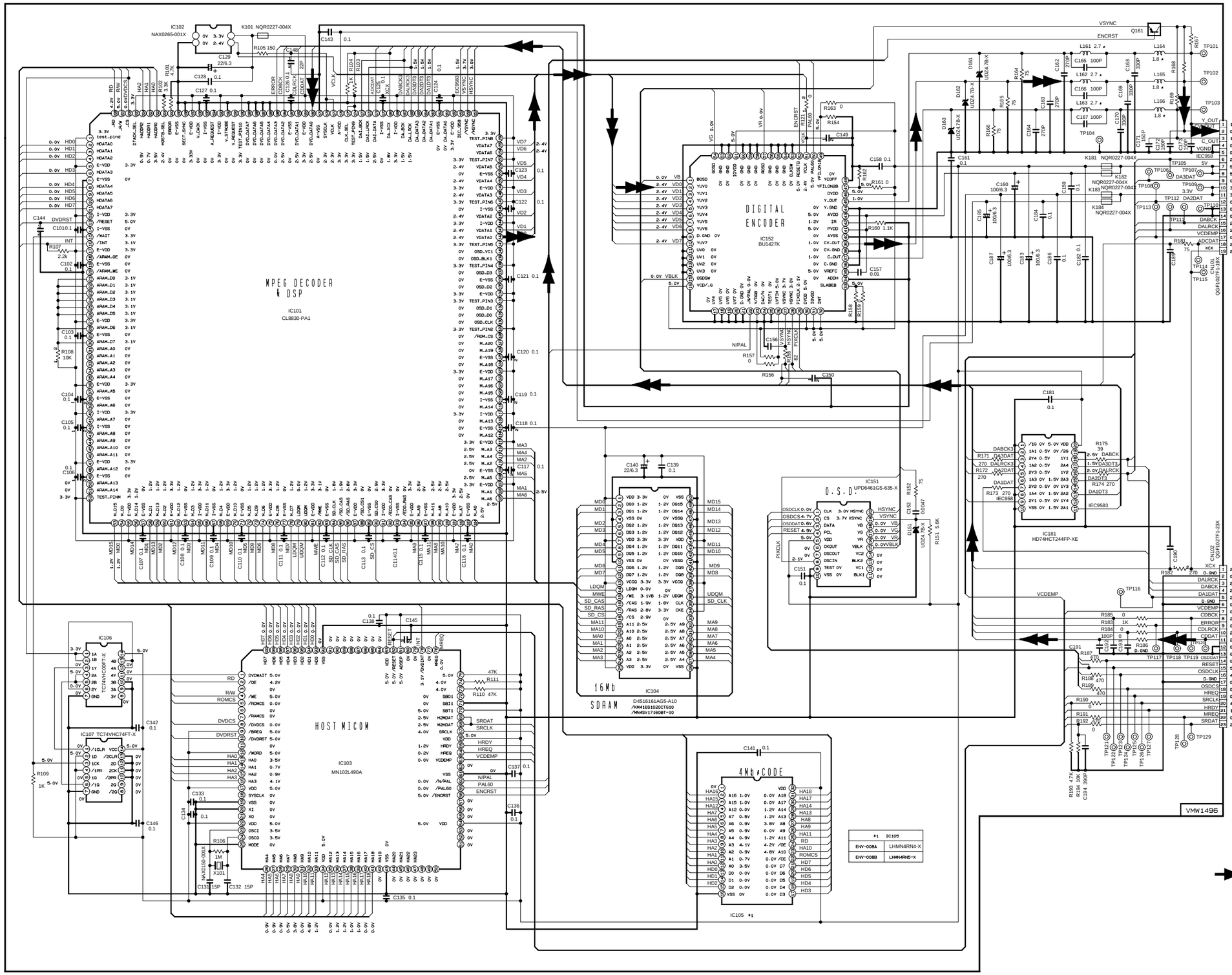

*1	IC105
ENV-008A	LHMN4RN4-X
ENV-008B	LHMN4RN5-X

SHEET 10/10

Printed circuit boards

■ Main & pre-amplifier board

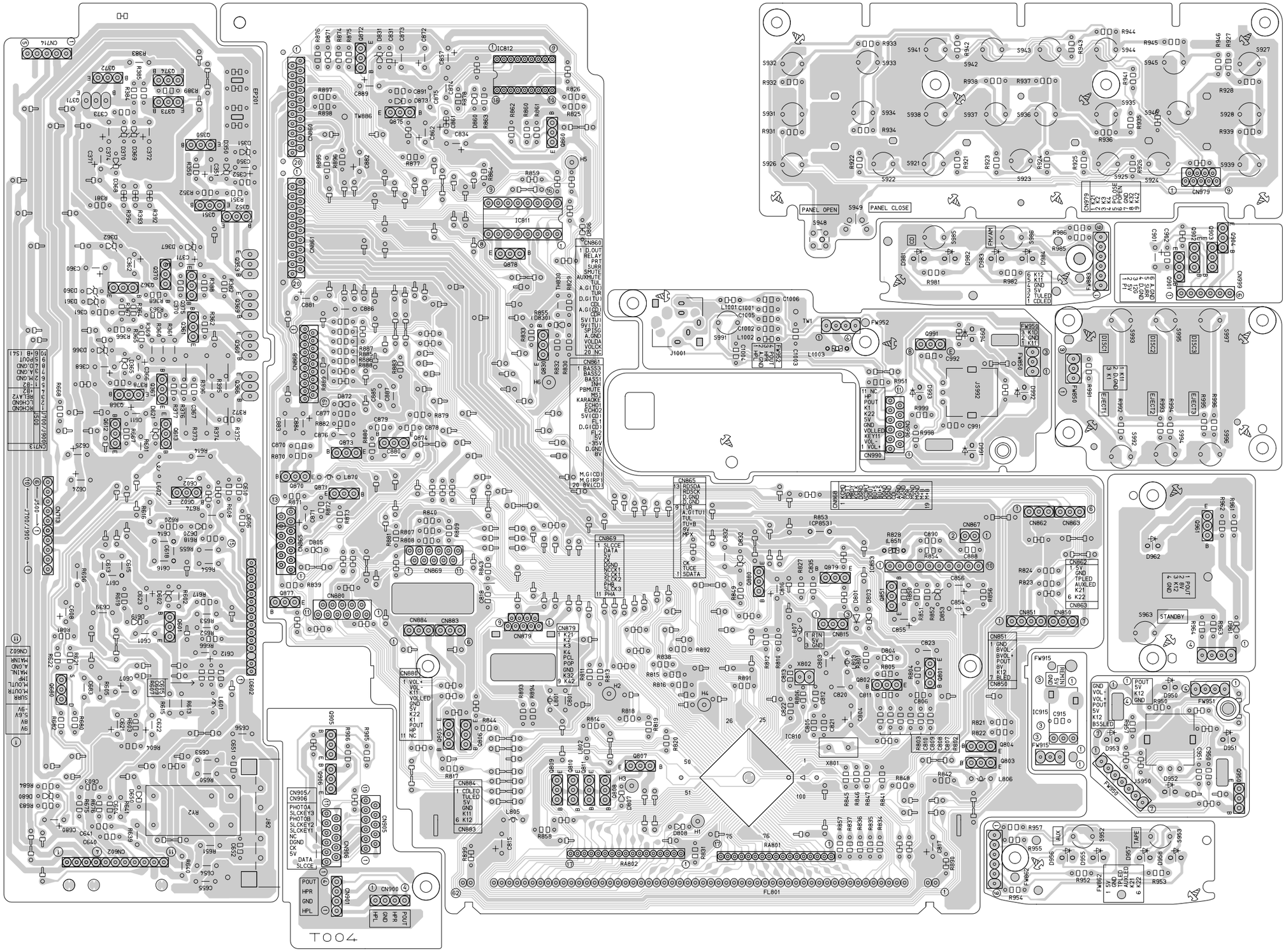

■ Power supplly & input/output board

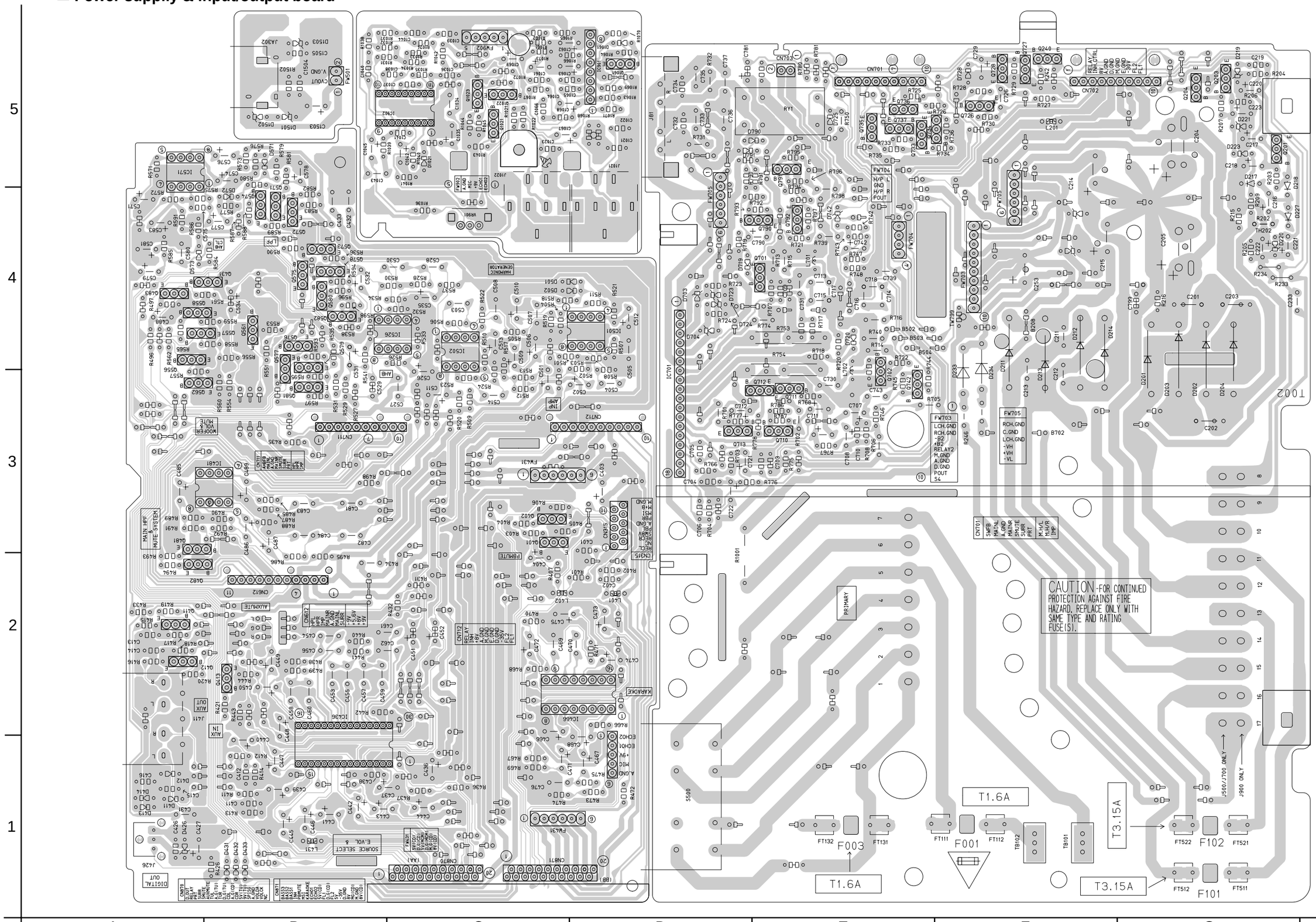

■ CD Servo control board

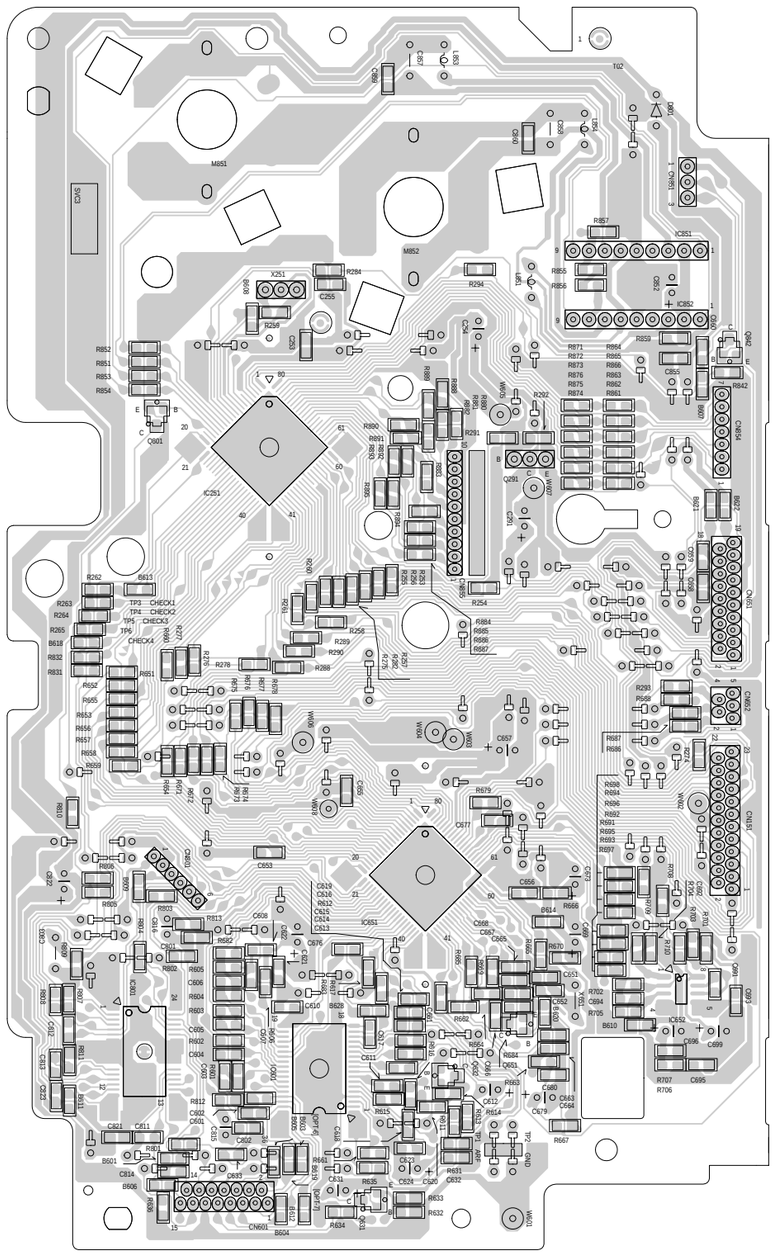

■ CD Select switch board

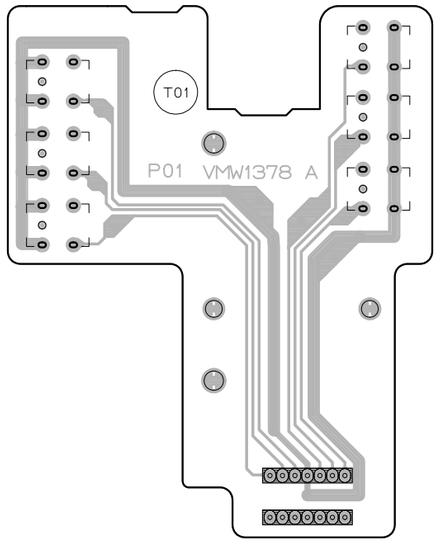

■ Cam switch board

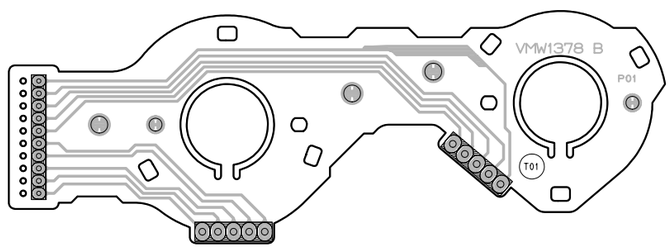

■ Video CD board

(Forward side)

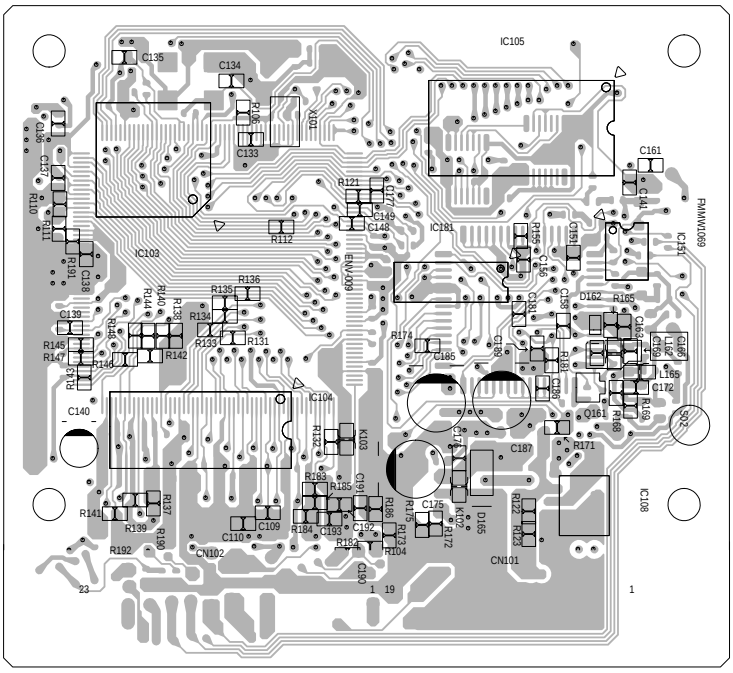

(Reverse side)

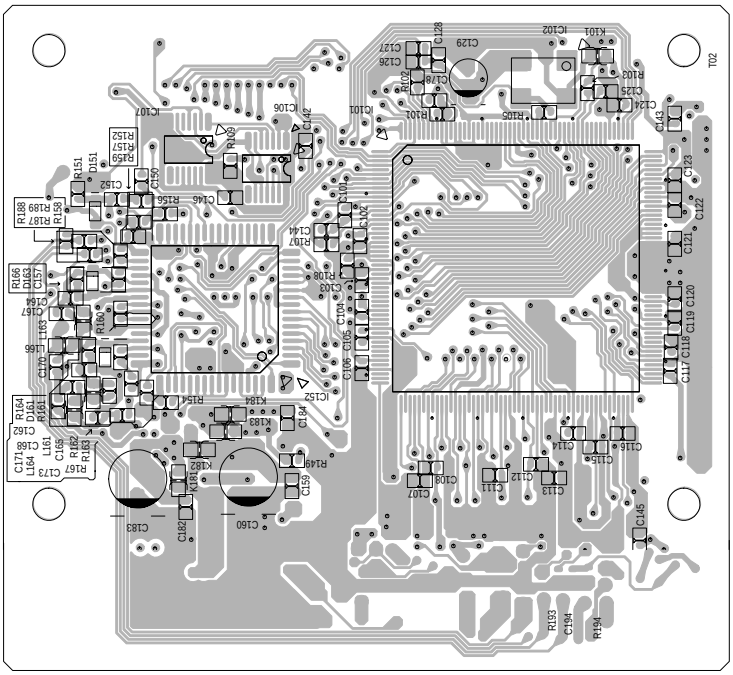

■ VCD board

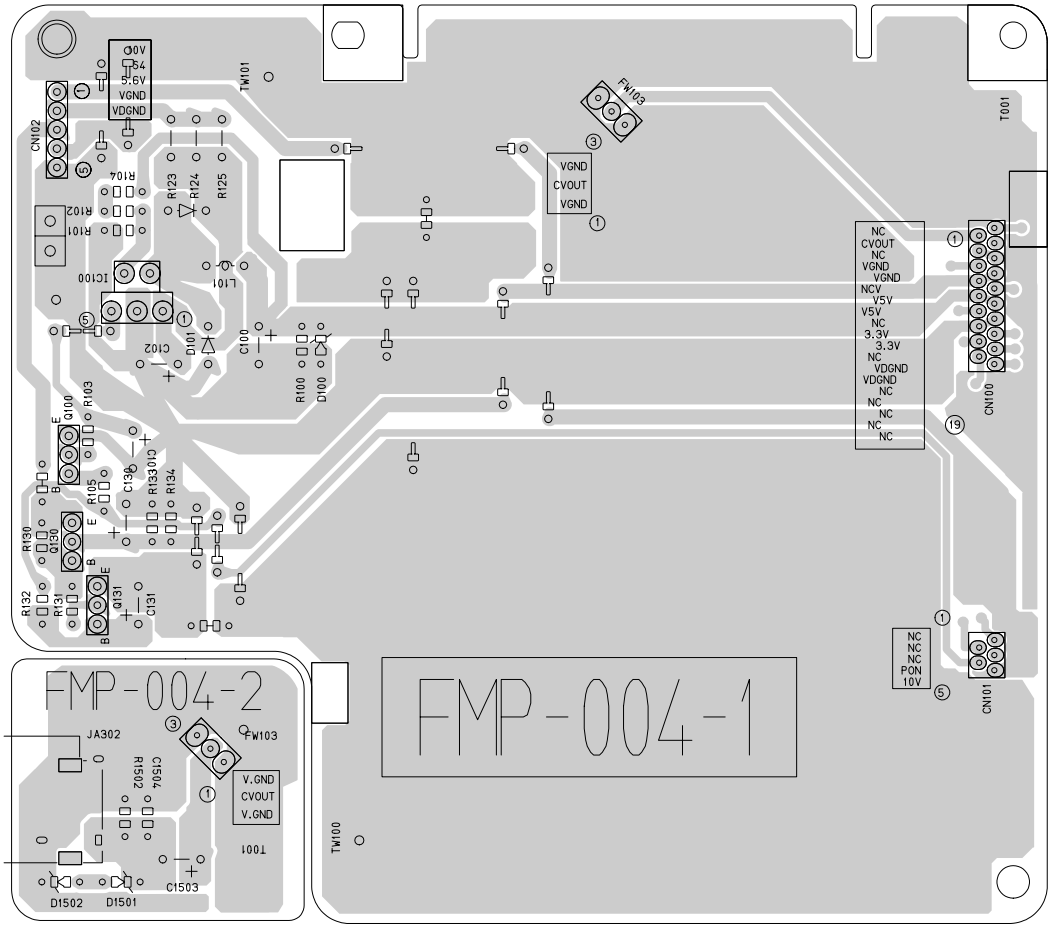
FMP-004-1
FMP-004-2
CN102
CN100
CN101
TW101
TW100
FW103
T001
IC100
Q100
Q130
Q131
JA302
D1502
D1501
C1503
R1502
C1504
VGND
CVOUT
VGND
NC
CVOUT
NC
VGND
VGND
NCV
V5V
V5V
NC
3.3V
3.3V
NC
VDGND
VDGND
NC
NC
NC
NC
NC
NC
NC
NC
NC
PON
10V
V.GND
CVOUT
V.GND

■ Head amplifier board

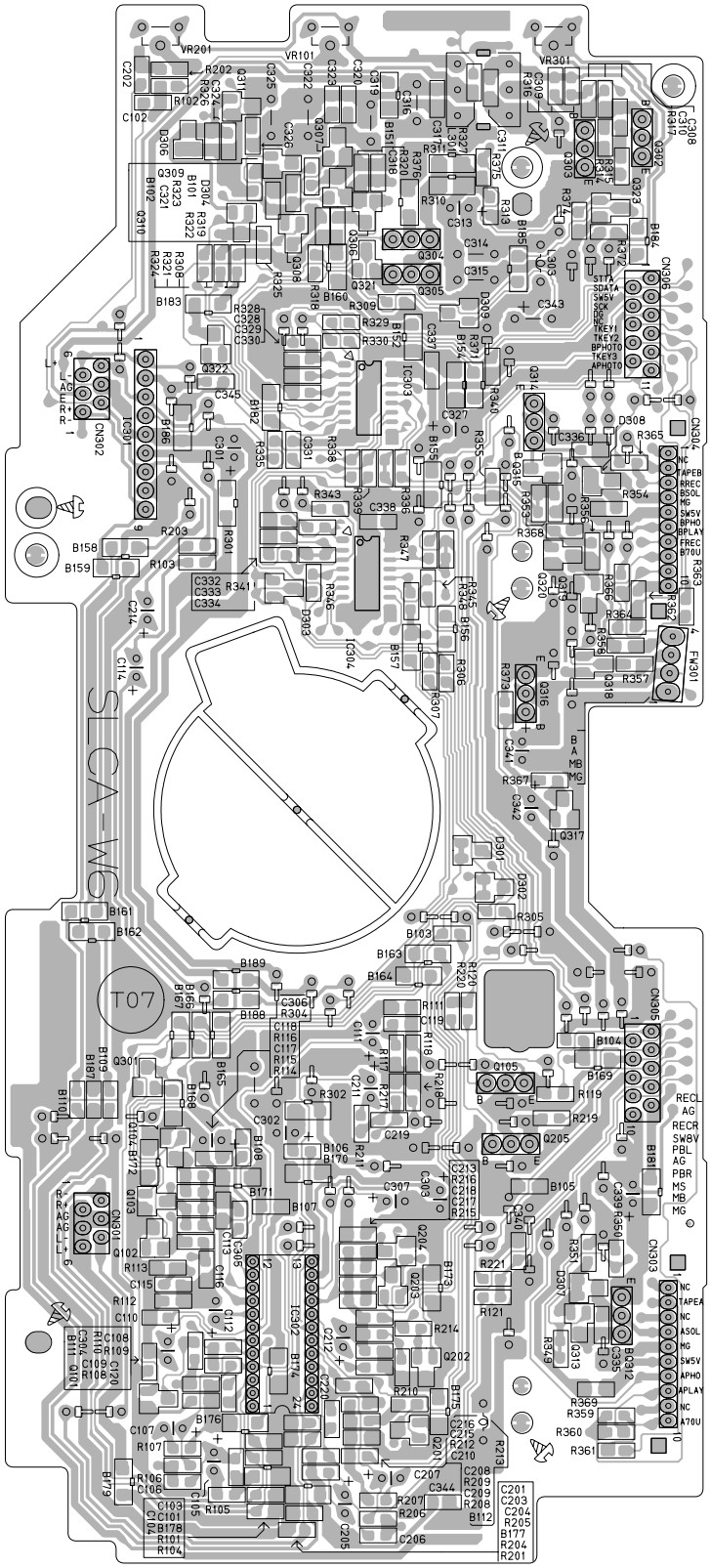

■ Tuner board

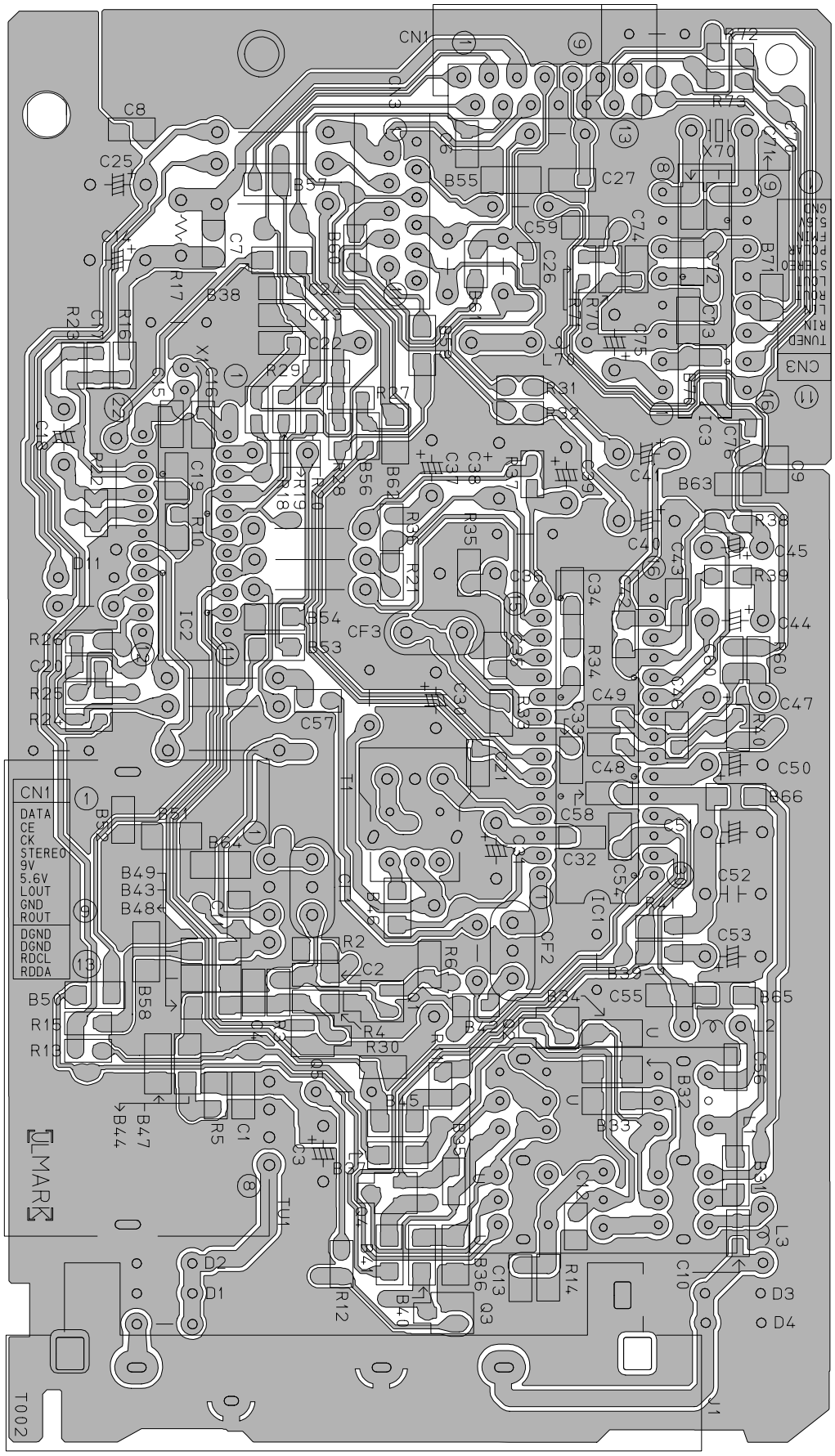
CN1
DATA
CE
CK
STEREO
9V
5.6V
LOUT
GND
ROUT
DGND
DGND
RDCL
RDDA
CN3
TUNED
RIN
LRCLK
STEREO
SPFIT
5V
GND
ULMAR
T002

PARTS LIST

[MX-J570V]
[MX-J680V]

* All printed circuit boards and its assemblies are not available as service parts.

Area suffix

US ---------- Singapore
UX ---------- Saudi Arabia

- Contents -

Exploded view of general assembly and parts list ---------- 3-2
CD changer mechanism assembly and parts list ---------- 3-5
CD mechanism assembly and parts list ---------- 3-7
Cassette mechanism assembly and parts list ---------- 3-8
Electrical parts list ---------- 3-13
Packing materials and accessories parts list ---------- 3-28

Exploded view of general assembly and parts list

■ Parts list (General assembly)

Block No. M1MM

⚠	Item	Parts number	Parts name	Q'ty	Description	Area
	1	GV10027-002A	FRONT PANEL	1	MX-J570V	
		GV10027-004A	FRONT PANEL	1	MX-J680V	
	2	E75896-001	FELT SPACER	2		
	3	GV40077-001A	JVC BADGE	1		
	4	GV40080-001A	STBY.INDICATOR	1		
	5	GV20056-001A	CD EJECT BUTTON	1		
	6	GV20057-002A	CD BUTTON	1		
	7	GV30087-001A	POWER BUTTON	1	ON/STANDBY MARK	
	8	GV30088-001A	PUSH BUTTON	1		
	9	GV20049-004A	SOURCE BUTTON(A)	1	CD/TUNER MARK	
	10	GV20050-002A	SOURCE BUTTON(B)	1	TAPE/AUX MARK	
	11	QYSDSF2608Z	SCREW	2	POWER BOARD	
	12	QYSDSF2608Z	SCREW	1	REMOTE SENSOR	
	13	QYSDSF2608Z	SCREW	4	STY.BKT+F.PANEL	
	14	GV30082-001A	STAY BRACKET	1		
	15	QYSDSF2608Z	SCREW	4	CD SWITCH BOARD	
	16	QYSDSF2608Z	SCREW	2	VOLUME BOARD	
	17	QYSDSF2608Z	SCREW	2	CD/TUNER S.BOARD	
	18	QYSDSF2608Z	SCREW	2	TAPE/AUX S.BOARD	
	19	FMYH4004-001	PLASTIC RIVET	2	TRANS.SHD/P.BOARD	
	20	GV10029-002A	CASS.HOLDER(L)	1	MX-J680V	
		GV10029-001A	CASS.HOLDER(L)	1	MX-J570V	
	21	GV10030-001A	CASS.HOLDER(R)	1	MX-J570V	
		GV10030-002A	CASS.HOLDER(R)	1	MX-J680V	
	22	GV20053-001A	CASS LENS (L)	1		
	23	GV20054-001A	CASS LENS (R)	1		
	24	GV30077-001A	EJECT BUTTON(A)	1		
	25	GV30078-001A	EJECT BUTTON(B)	1		
	26	FMKW4009-002	HOLDER SPRING(A)	1		
	27	FMKW4010-002	HOLDER SPRING(B)	1		
	28	FMKW4011-001	SPRING	1	FOR EJECT LEVER	
	29	FMKS3002-003	EJECT LEVER(A)	1		
	30	FMKS3003-003	EJECT LEVER(B)	1		
	31	GV40034-001A	DAMPER ASSY	2		
	32	VKY4180-401	CASSETTE SPRING	4		
	33	GV10014-005A	CASE ASSY	1		
	34	MXN-13FB12F	DC MOTOR	1		
	35	GV40022-001A	MOTOR PULLEY	1		
	36	GV30038-001A	CAPSTAN BELT	1		
	37	GV30086-009A	MOVING PANEL(A)	1	MX-J680V	
		GV30086-007A	MOVING PANEL(A)	1	MX-J570V	
	38	GV30089-001A	PANEL PLATE	1		
	39	GV20058-003A	CONTROL BUTTON	1		
	40	QYSDSF2608Z	SCREW	2		
	41	GV30042-002A	PANEL BRACKET	1		
	42	GV40028-001A	PANEL HOLDER(L)	1		
	43	GV40028-002A	PANEL HOLDER(R)	1		
	44	QYSDSF2608Z	SCREW	4	S.BRD./C.BTN.ASS'Y	

■ Parts list (General assembly)

Block No. M1MM

⚠	Item	Parts number	Parts name	Q'ty	Description	Area
	45	GV20059-002A	MOVING PANEL(B)	1	MX-J680V	
		GV20059-001A	MOVING PANEL(B)	1	MX-J570V	
	46	QYSBST2606Z	T.SCREW	3	M.PNL B/PNL BKT	
	47	VKZ4341-204	SPECIAL SCREW	2	ARM CASE/PNL BKT	
	48	QYSDSF2608Z	SCREW	2	FL BOARD / CASE	
	49	QYSSSF3012Z	TAP SCREW	4	MOVING PNL./F.P	
	50	----------	CASSETTE MECHA	1		
	51	FMKL4012-004	EJECT SAFETY(A)	1		
	52	FMKL4013-001	EJECT SAFETY(B)	1		
	53	FMKW4007-001	SPRING (A)	1	EJECT SAFETY(A)	
	54	FMKW4008-001	SPRING (B)	1	EJECT SAFETY(B)	
	55	GV20055-001A	HOLDER BRACKET	1		
	56	QYSBSG3010Z	T.SCREW	2	F.P.TO H.BKT	
	57	QYSBSG3010Z	T.SCREW	2	F.P.TO CHS.BASE	
	58	QYSBSG3010Z	T.SCREW	3	MECHA & H.BKT	
	59	QYSBSF3012Z	SCREW	4	MECHA & F.PANEL	
	60	QYSBSG3010Z	T.SCREW	2	TRANS SHD/C.BASE	
	61	----------	SVC3 MECHA UNIT	1		
	62	E309662-001SM	DISC STOPPER	1		
	63	QYSBSF3008Z	SCREW	1	FOR DISC STOPPER	
	64	GV10025-001A	CHASSIS BASE	1		
	65	E75896-006	FELT SPACER	2	CHAS.BASE FOOT	
	66	GV30083-001A	HEAT SINK	1		
	67	QYSBSG3014Z	T.SCREW	2	FOR LEAF SPRING	
	68	QYSBSG3020E	TAP SCREW	2	FOR IC BRACKET	
	69	GV40029-001A	LEAF SPRING	1		
	70	GV30080-001A	IC BRACKET	1		
	71	QYSDSTL4008Z	SPECIAL SCREW	4		
	72	GV30079-001A	TRANS.SHIELD	1		
	73	QYSBSGG3008E	T.SCREW	1	M.BOARD & C.BASE	
	74	QMPK090-205-JN	POWER CORD	1		US
		QMPR110-200-JN	POWER CORD	1		UX
	75	QZW0033-001	STRAIN RELIEF	1		
⚠	78	QQT0276-004	TRANSFORMER	1	T001	
⚠	79	QMF51E2-3R15-J1	FUSE	1	F001	
⚠	80	QMF51E2-3R15-J1	FUSE	1	F101	
⚠	81	QMF51E2-3R15-J1	FUSE	1	F102	
	82	QUQ412-1028CJ	FFC WIRE	1	FC315	
	83	QUQ412-1112DJ	FFC WIRE	1	FC869	
	84	QUQ610-0915BJ	FFC WIRE	1	FC879	
	85	QUQ110-1908BJ	FFC WIRE	1	FC868	
	86	QUQ412-0917CJ	FFC WIRE	1	FC865	
	87	QUQ412-1112DJ	FFC WIRE	1	FC880	
	88	QUQ412-1112DJ	FFC WIRE	1	FC906	
	89	GV10026-030A	REAR PANEL	1	MX-J680V	
		GV10026-028A	REAR PANEL	1	MX-J570V	
	90	E207356-002SM	REAR COVER	1		
	91	QYSBSF3010Z	SCREW	2	SVC3/STAY BKT	

■ Parts list (General assembly)

Block No. M1MM

⚠	Item	Parts number	Parts name	Q'ty	Description	Area
	92	QYSBSGY3008M	SPECIAL SCREW	2	ANTENA/R.PANEL	
	93	QYSBSGY3008M	SPECIAL SCREW	1	AUX TERM/R.PANEL	
	94	QYSBSGY3008M	SPECIAL SCREW	2	SPK TERM/R.PANEL	
	95	QYSBSGY3008M	SPECIAL SCREW	4	H.SINK/ R.PANEL	
	96	QYSBSGY3008M	SPECIAL SCREW	2	R.COVER/R PANEL	
	97	QYSBSGY3008M	SPECIAL SCREW	1	GROUND /R.PANEL	
	98	QYSBSGY3008M	SPECIAL SCREW	2	SVC3/REAR PANEL	
	99	QYSBSGY3008M	SPECIAL SCREW	1	R.PANEL/C.BASE	
	100	QYSBSGY3008M	SPECIAL SCREW	1	OPTICAL OUT/R.PANEL	
	101	GV10024-003A/S/	METAL COVER	1	MX-J680V	
		GV10024-001A/S/	METAL COVER	1	MX-J570V	
	102	QYSDSG3006N	T.SCREW	2	M.COVER+C.BASE	
	103	QYSBSGY3008M	SPECIAL SCREW	6	M.COVER+R.PANEL	
	104	GV30074-001A	CD FITTING	1	DISC 1	
	105	GV30075-001A	CD FITTING	1	DISC 2	
	106	GV30076-004A	CD FITTING	1	DISC 3	
	107	GV30084-002A	KNOB(BASS&VOL.)	2	MX-J680V	
		GV30084-001A	KNOB(BASS&VOL.)	2	MX-J570V	
	108	GV10028-009A	WINDOW SCREEN	1	MX-J570V	
		GV10028-010A	WINDOW SCREEN	1	MX-J680V	
	109	QYSDSF2608Z	SCREW	2		
	110	FMYH4004-001	PLASTIC RIVET	2	TUNER BRD.HOLDER	
	113	GV30104-001A	PROTECT SHHET	1		
	114	GV40082-001A	MIC BRACKET	1		
	115	QYSDSF2608Z	SCREW	2	MIC BKT.+F.PANEL	
	116	QYSBST3006Z	T.SCREW	1	MIC BRD./MIC.BKT	
	117	VKZ4001-110	WIRE CLAMP	1		
⚠	118	QMF51E2-1R6-J1	FUSE	1	F003	
	119	QYSBSF3012M	SCREW	2	VOL.SEL/R.PANEL	
	120	GV40083-001A	MIC VOL.KNOB	1		
	121	GV40123-001A	SPACER	1	STICK TO BRIDGE	
	122	GV30032-001A	FL HOLDER	1		
	123	E3400-439	FELT SPACER	2		
	124	LV30830-002A	BRACKET	1		
	125	QYSBSF3008Z	SCREW	1	BRACKET/SVC3	
	126	E310243-002	PLASTIC RIVET	2	V.BRD./BRACKET	
	127	QYSBSF3008Z	SCREW	1	REG.BRD./SVC3	
	128	QUQB10-1909BJ	FFC WIRE	1	FC100	
	129	QUQ410-0508CJ	FFC WIRE	1	FC101	
	130	QUQ410-2306CJ	CARD WIRE	1	FC151(MX-J680V)	US
		FSQ110-2306AJC	CARD WIRE	1	FC151(MX-J680V)	UX
		QUQ410-2306CJ	CARD WIRE	1	FC151(MX-J570V)	US,UX
	131	QYSBSGY3008M	SPECIAL SCREW	1	VIDEO OUT/R.PANEL	

Block No. M 1 M M

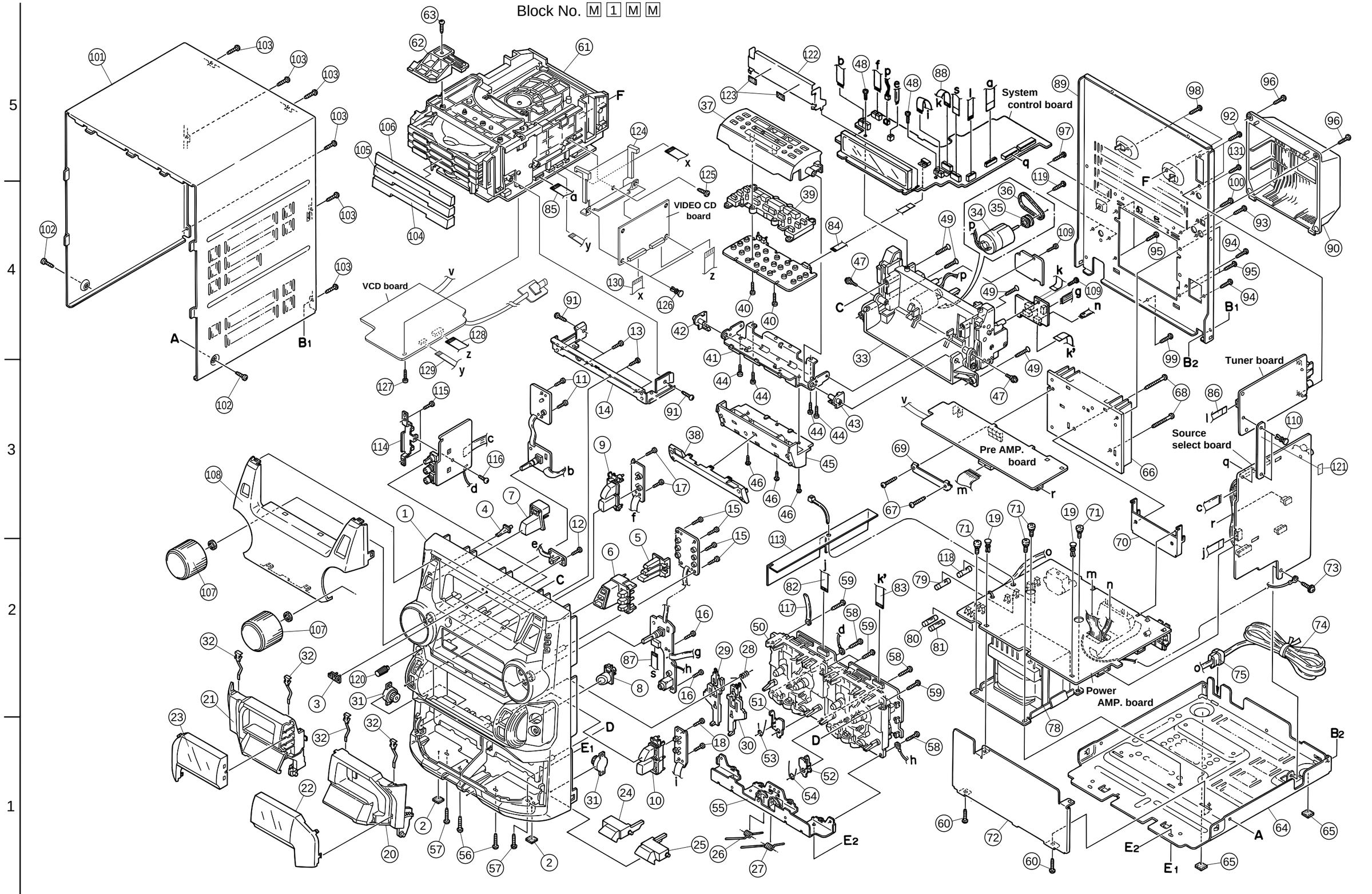

CD changer mechanism assembly and parts list

SVC3-3M

Block No. M 2 M M

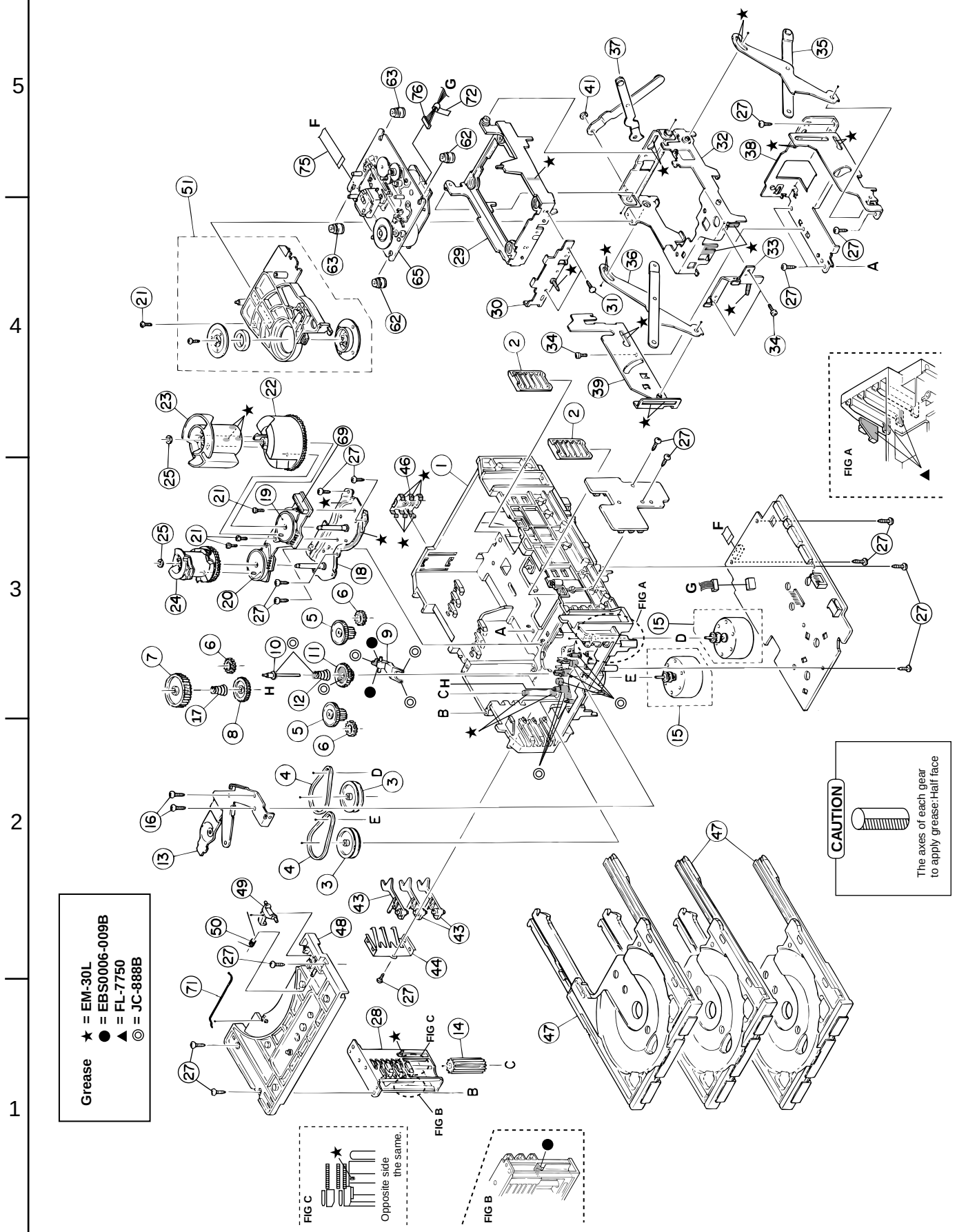

■ Parts list (CD changer mechanism)

Block No. M2MM

⚠	Item	Parts number	Parts name	Q'ty	Description	Area
	1	VKS1144-004	CHASSIS	1		
	2	VKS3698-003	TRAY GUIDE	2		
	3	VKS5532-003	PULLEY GEAR	2		
	4	VKB3000-164	BELT	2		
	5	VKS5505-003	GEAR B	2		
	6	VKS5506-002	GEAR C	3		
	7	VKS5507-002	CROSS GEAR U	1		
	8	VKS5508-002	CROSS GEAR L	1		
	9	VKS5510-003	SELECT LEVER	1		
	10	VKH5769-001	S.G.SHAFT	1		
	11	VKS5511-002	SELECT GEAR	1		
	12	VKW5155-003	COMP.SPRING	1	FOR SELECT GEAR	
	13	VKM3846-002	GEAR BRACKET	1		
	14	VKS5509-002MM	CYLINDER GEAR	1		
	15	MSN5D257A-SA2	D.C.MOTOR ASS'Y	2		
	16	QYSPSPD2616Z	SCREW	2	FOR MOTOR	
	17	LV40612-001A	COMP.SPRING	1		
	18	VKM3825-00B	C.G.BASE ASS'Y	1		
	19	VKZ3172-00ASS	CAM SW. R ASS'Y	1		
	20	VKZ3173-00ASS	CAM SW. L ASS'Y	1		
	21	QYSPST2606Z	SCREW	4		
	22	VKS2263-002MM	CAM R1	1		
	23	VKS2264-002MM	CAM R2	1		
	24	VKS2265-002MM	CAM GEAR L	1		
	25	WDL316050MM	SLIT WASHER	2		
	27	QYSBSF2608Z	T.SCREW	18	FOR C.GEAR BASE	
	28	VKS3702-00FMM	DRIVE UNIT	1		
	29	VKS2247-004	MECHA HOLDER A	1		
	30	VKL7767-00D	BRACKET ASS'Y	1		
	31	QYSBSF2606Z	SCREW	2	FOR BRACKET	
	32	VKM3860-00C	M.HOLDER B AS'Y	1		
	33	VKL7802-00D	M.HOLDER C AS'Y	1		
	34	QYSDST2604Z	SCREW	3		
	35	VKL7810-00B	LIFTER ASS'Y R	1		
	36	VKL7811-00B	LIFTER ASS'Y L	1		
	37	VKL7812-00B	LIFTER ASS'Y H	1		
	38	VKL2732-003	LIFTER BASE	1		
	39	VKM3857-002	LIFTER BRACKET	1		
	41	WDL266035-2	SLIT WASHER	1		
	43	VKS5514-002MM	LOCK LEVER	3		
	44	VKY3133-002MM	RETURN SPRING	1		
	46	VKY3134-003MM	CLICK SPRING	1		
	47	VKS2252-00E	TRAY ASS'Y	3		
	48	VKS2250-003	TOP BRACKET	1		
	49	VKS5515-002	S.TRAY STOPPER	1		
	50	VKW5156-004	TORSION SPRING	1		
	51	VKS3703-00G	CLAMPER ASS'Y	1		
	62	LV40866-002A	INSULATOR	2		
	63	LV40761-003A	INSULATOR	2		
	65	----------	CD MECHA	1		
	69	QGB2021L1-10	CONNECTOR	1		
	71	VKW5187-001	ROD	1		
	72	VYSA1R2-033	SPACER	1	FOR EWS176-008	
	75	QUQ610-1509AJ	FFC WIRE	1	TRAVERSE 15	
	76	EWS176-008	FLAT WIRE	1	TRAVERSE 6	

CD mechanism assembly and parts list

Block No. M 3 M M

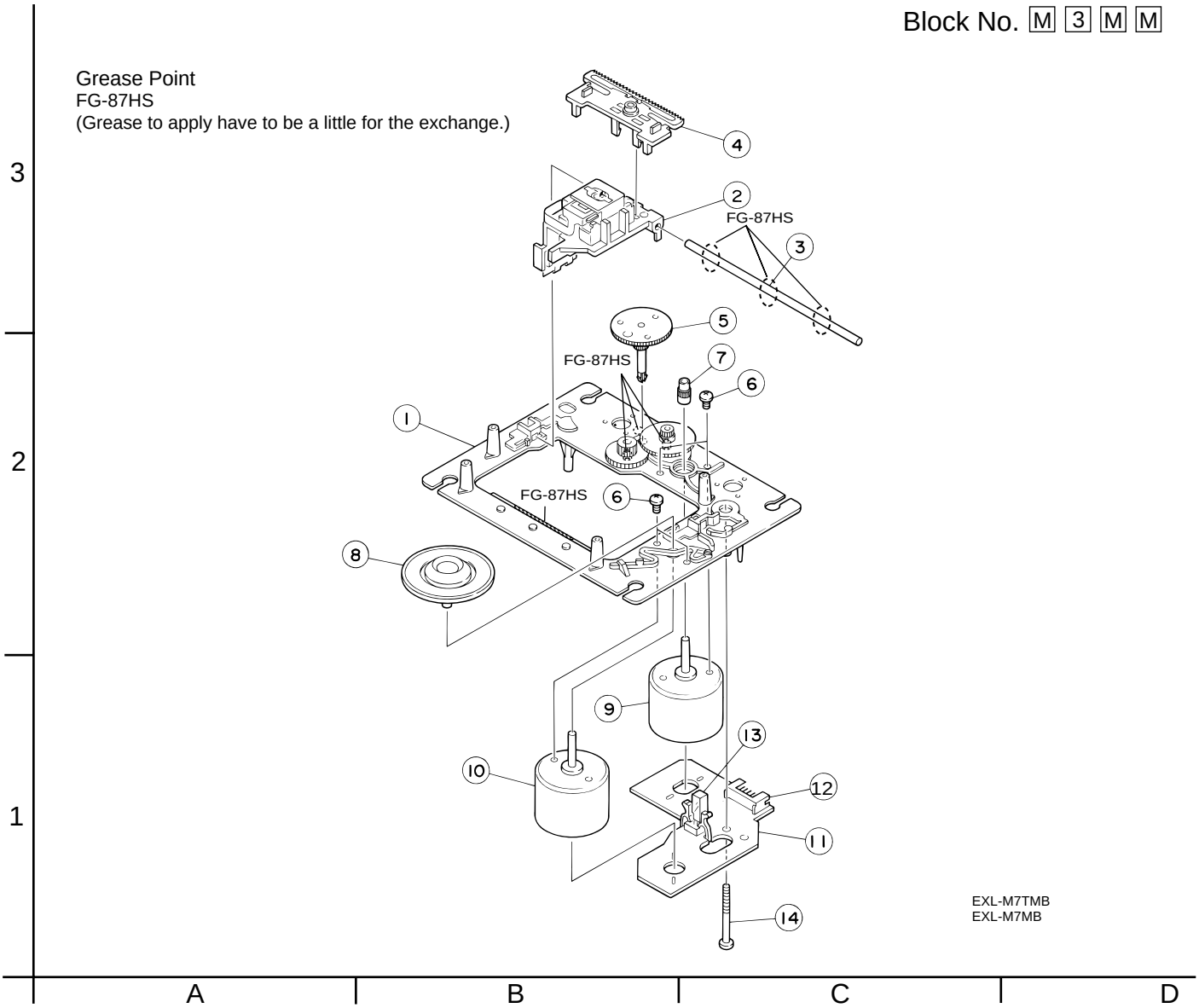

■ Parts list (CD mechanism)

Block No. M3MM

⚠	Item	Parts number	Parts name	Q'ty	Description	Area
	1	E102731-221SM	MECHA BASE	1		
	2	OPTIMA-7B	OPTICAL PICK UP	1		
	3	E406777-002SM	CD SHAFT	1		
	4	LV31002-001A	CD RACK	1		
	5	E307745-441SM	MECHA GEAR	1		
	6	QYSDSP2003N	SCREW	4		
	7	E406750-442SM	PINION GEAR	1		
	8	EPB-001PK	TURN TABLE	1	SINGLE CD	
		EPB309173PKA	TURN TABLE	1	CHANGER CD	
	9	E406784-001	FEED MOTOR	1		
	10	QAR0130-001	SPPINDLE MOTOR	1		
	11	EMW10190-441	P.C.BOARD	1		
	12	QGA2001F1-06	6P PLUG ASSY	1		
	13	QSW0506-001	LEAF SWITCH	1		
	14	E75832-221SS	SPECIAL SCREW	1		

Cassette mechanism assembly and parts list

Block No. M 4 M M

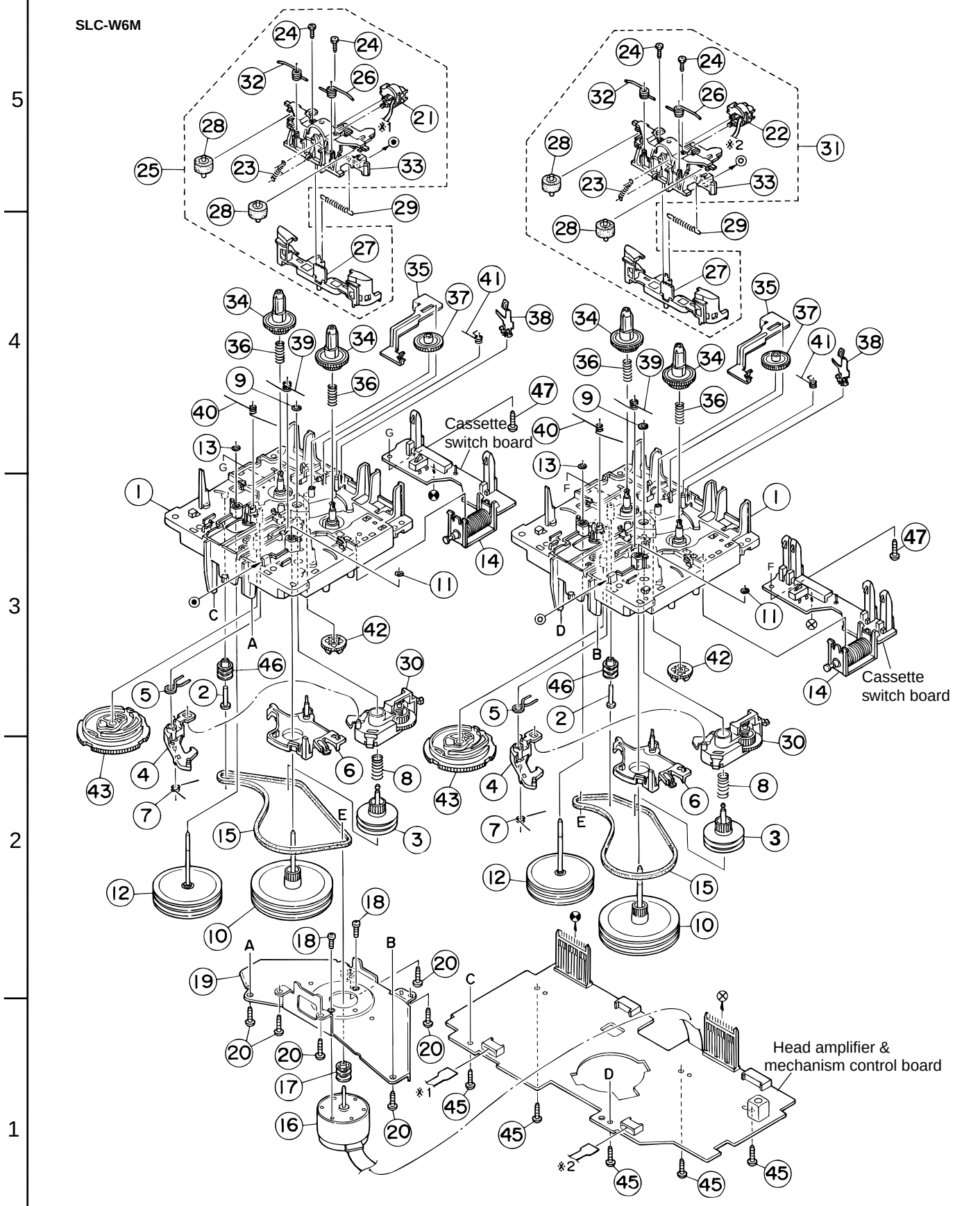

■ Parts list (Cassette mechanism)

Block No. M4MM

⚠	Item	Parts number	Parts name	Q'ty	Description	Area
	1	VKS1165-00H	CHASSIS B.ASS'Y	2		
	2	VKH5786-002	SHAFT	2		
	3	VKS5603-00D	MAIN PULLEY ASY	2		
	4	VKS3785-001MM	FR ARM	2		
	5	VKW5284-002	SWING SPRING	2		
	6	VKS2278-003	TRIGGER ARM	2		
	7	VKW5301-001	FR SPRING	2		
	8	VKW5266-001	ELEVATOR SPRING	2		
	9	WDL214025	WASHER	2		
	10	VKF3205-00B	F.WHEEL ASSY(R)	2		
	11	WDL183425	SLIT WASHER	2		
	12	VKF3207-00B	F.WHEEL ASSY(L)	2		
	13	WDL173525-6	SLIT WASHER	2		
	14	VKZ3174-00A	DC SOLENOID	2		
	15	VKB3000-182	CAPSTAN BELT(B)	2		
	16	MSI-5U2LWA	D.C.MOTOR ASS'Y	1		
	17	VKR4761-001	MOTOR PULLEY	1		
	18	QYSPSP2604Z	SCREW	2		
	19	VKM3907-001	JOINT BRACKET	1		
	20	QYSBSF2608Z	T.SCREW	6		
	21	LV41090-001A	P.B.HEAD	1		
	22	LV41089-001A	R/P&E HEAD	1		
	23	VKW5302-001	HEAD SPRING	2		
	24	VKZ4730-001	SPECIAL SCREW	4		
	25	VKS2279-00D	HEAD MOUNT ASSY	1		
	26	VKW5299-002	PIN ROL.SP.(R)	2		
	27	VKS2277-005	DIRECTION LEVER	2		
	28	VKP4233-00A	PINCH ROL. ASSY	4		
	29	VKW5285-001	RETURN SPRING	2		
	30	VKS3786-00G	CLUTCH ASS'Y	2		
	31	VKS2275-00D	HEAD MOUNT ASSY	1		
	32	VKW5300-002	PIN ROL.SP.(L)	2		
	33	VKS1167-001	HEAD MOUNT BASE	2		
	34	VKS2274-002	REEL GEAR	4		
	35	VKM3906-003	PLAY SW LEVER	2		
	36	VKW5286-002	B.T. SPRING	4		
	37	VKS5559-001	PLAY IDLE GEAR	2		
	38	VKY3149-002	CASSETTE SP.	2		
	39	VKW5279-001	HEAD BASE SP(R)	2		
	40	VKW5280-001	HEAD BASE SP(L)	2		
	41	VKW5296-001	EARTH SPRING	2		
	42	VKS5597-00A	BLIND	2		
	43	VKS1166-003	CONTROL CAM	2		
	45	QYSBSF2608Z	T.SCREW	5	FOR P.W.B.	
	46	VKR4749-002	IDLE PULLEY	2		
	47	QYSBSF2006Z	SCREW	2		

Grease point

Grease

- ★ =JC-525
- ■ =FL-7750
- ▲ =UD-24
- △ =UD-24H2
- ● =LX-1349B
- ◎ =MOBIL-1

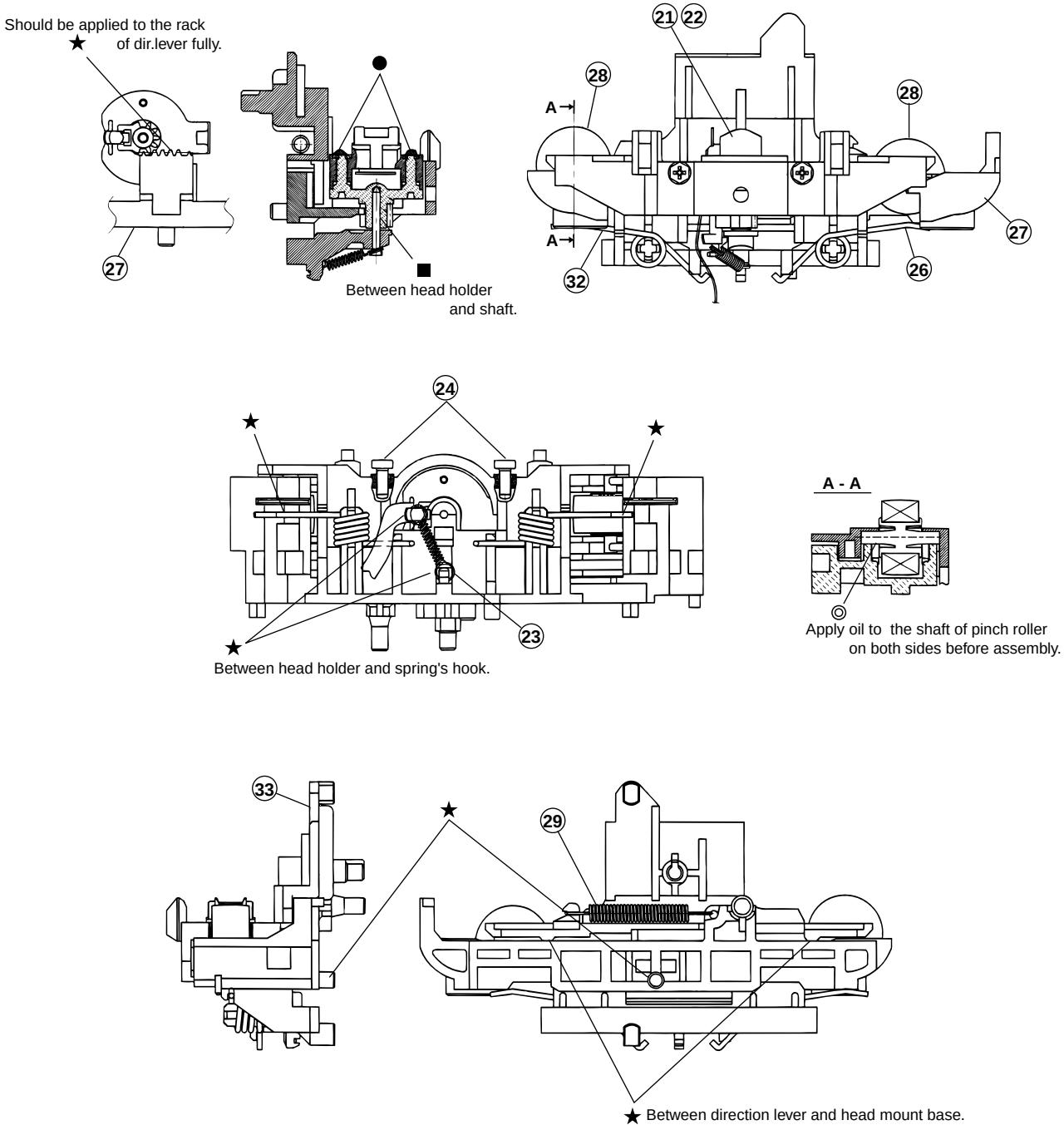

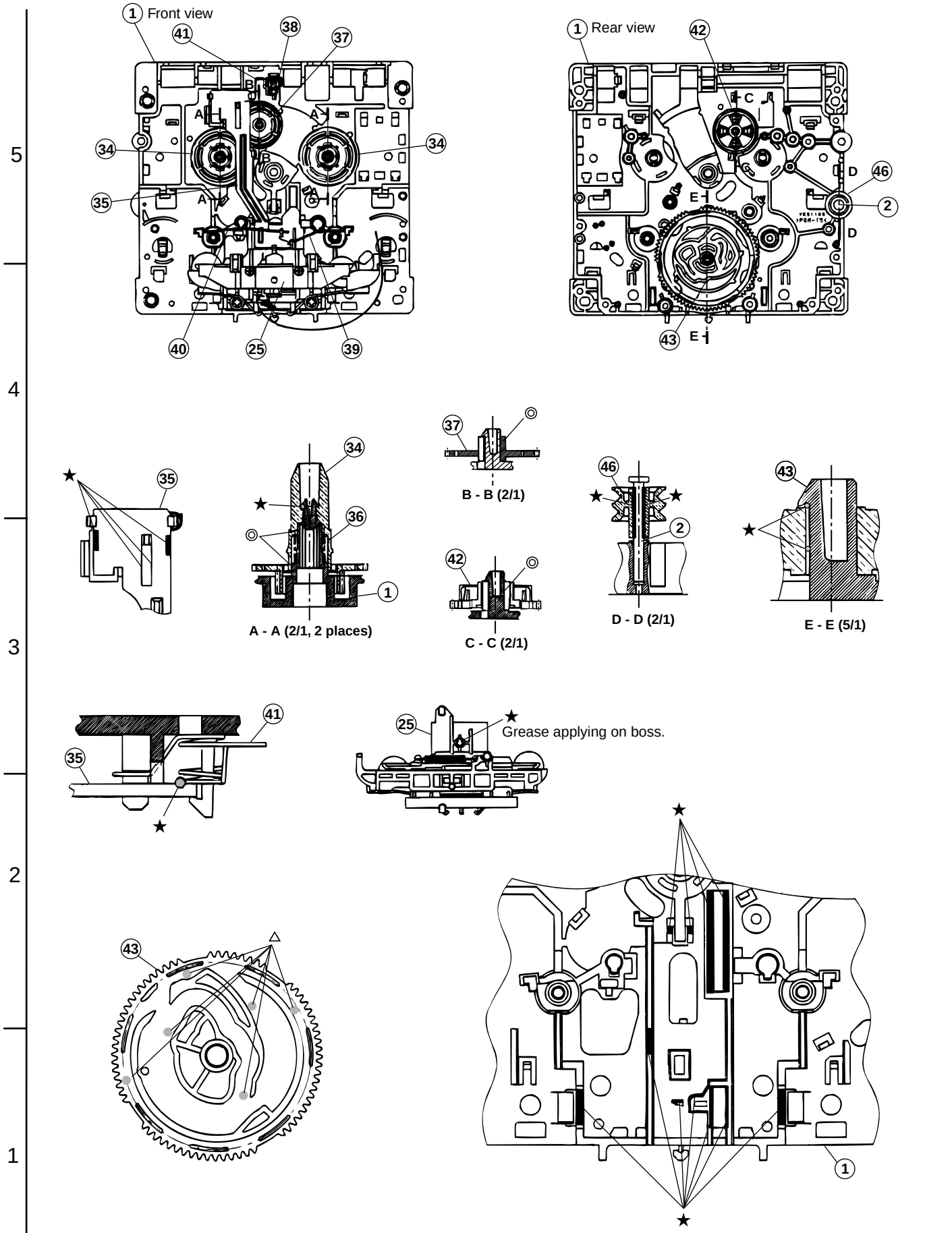
1 Front view
41
38
37
34
34
35
A
A
A
A
B
40
25
39
1 Rear view
42
C
D
46
2
D
E
43
E
35
34
36
1
A - A (2/1, 2 places)
37
B - B (2/1)
42
C - C (2/1)
46
2
D - D (2/1)
43
E - E (5/1)
41
35
25
Grease applying on boss.
43
1

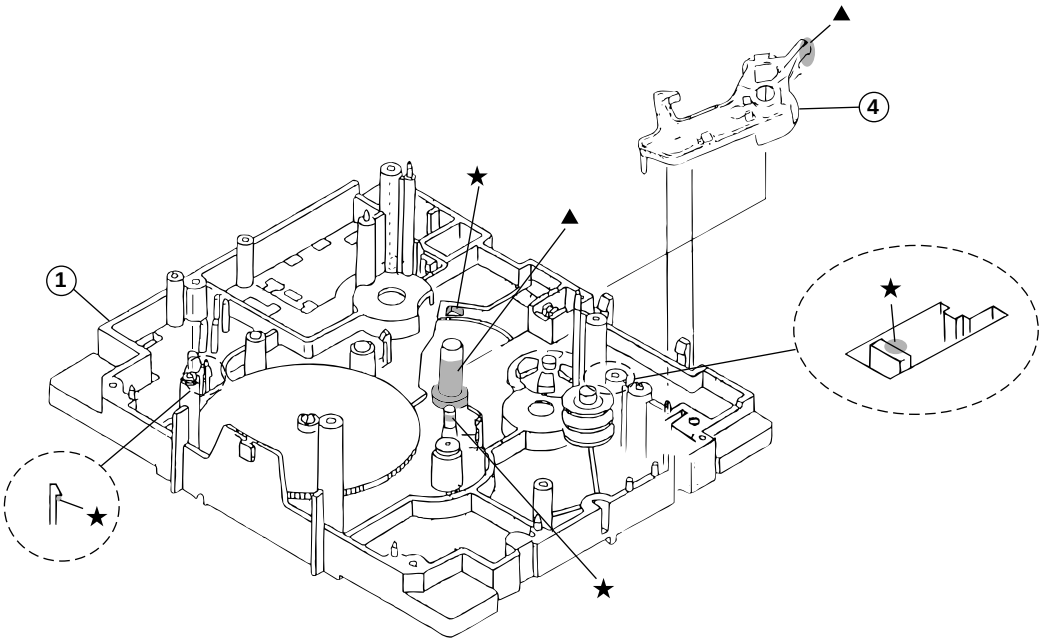
1
4

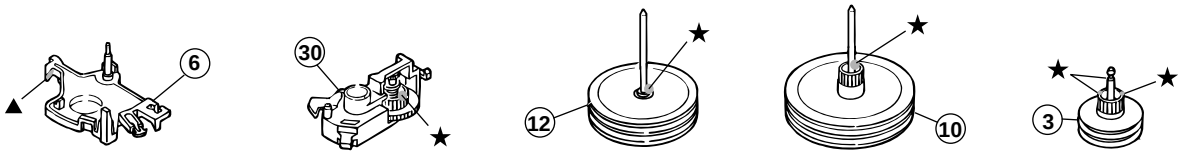
6
30
12
10
3

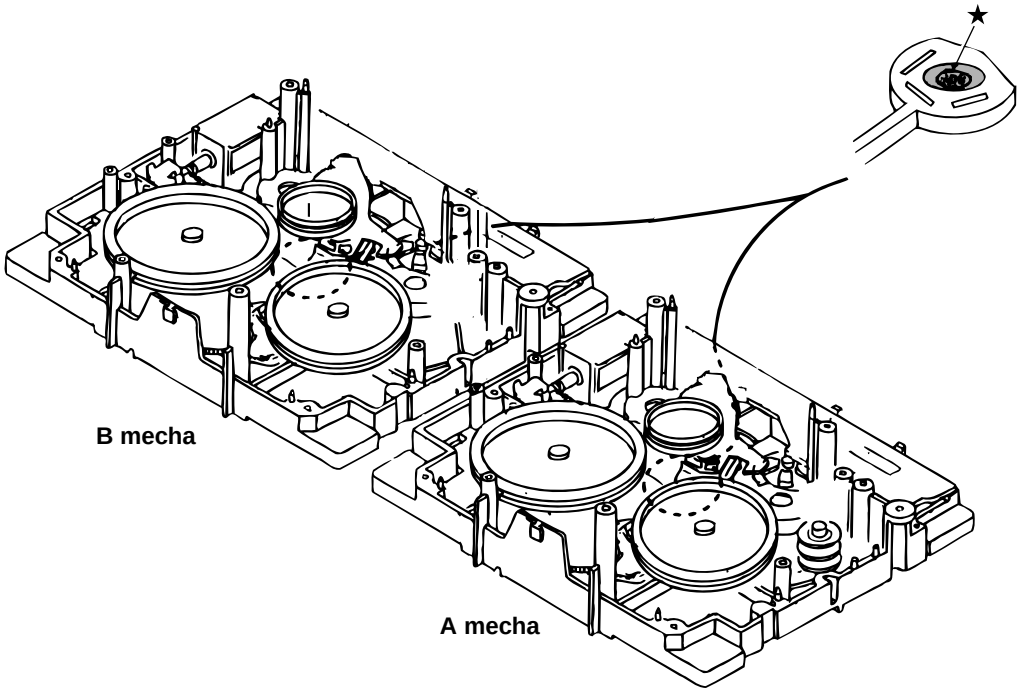
B mecha
A mecha

Electrical parts list

■ **Electrical parts list (Power supplly&input/output board)** **Block No. 01**

⚠	Item	Parts number	Parts name	Remarks	Area
	C 201	QFV72AJ-104Z	M CAPACITOR	.10MF 5% 100V	
	C 202	QFV72AJ-104Z	M CAPACITOR	.10MF 5% 100V	
	C 203	QFV72AJ-104Z	M CAPACITOR	.10MF 5% 100V	
	C 204	QEZ0510-478	E CAPACITOR	4700MF	
	C 205	QEZ0510-478	E CAPACITOR	4700MF	
	C 211	QFVJ1HJ-104Z	TF CAPACITOR	.10MF 5% 50V	
	C 212	QFVJ1HJ-104Z	TF CAPACITOR	.10MF 5% 50V	
	C 213	QFVJ1HJ-104Z	TF CAPACITOR	.10MF 5% 50V	
	C 214	EETB1VM-228JC	E CAPACITOR		
	C 215	EETB1VM-228JC	E CAPACITOR		
	C 216	QETN1VM-107Z	E CAPACITOR	100MF 20% 35V	
	C 217	QETN1JM-476Z	E CAPACITOR	47MF 20% 63V	
	C 218	EETC1HM-226ZJC	E CAPACITOR		
	C 219	FQDYB1CM-103Y	C CAPACITOR		
	C 220	EETC1HM-226ZJC	E CAPACITOR		
	C 221	EETC1HM-475ZJC	E CAPACITOR		
	C 222	EETC1HM-475ZJC	E CAPACITOR		
	C 223	EETC1HM-226ZJC	E CAPACITOR		
	C 233	QFVJ1HJ-224Z	CAPACITOR	.22MF 5% 50V	
	C 253	EETB1EM-338JC	E CAPACITOR		
	C 403	EETC1AM-477ZJC	E CAPACITOR		
	C 404	QETN1CM-476Z	E CAPACITOR	47MF 20% 16V	
	C 411	QCBB1HK-221Y	C CAPACITOR	220PF 10% 50V	
	C 412	QCBB1HK-221Y	C CAPACITOR	220PF 10% 50V	
	C 415	FQDGB1HK-102Y	C CAPACITOR		
	C 426	FQDVB1EZ-223Y	C CAPACITOR		
	C 427	EETC1EM-106ZJC	E CAPACITOR		
	C 433	QFLM1HJ-104Z	M CAPACITOR	.10MF 5% 50V	
	C 434	QETN0JM-108Z	E CAPACITOR	1000MF 20% 6.3V	
	C 436	EETC1AM-107ZJC	E CAPACITOR		
	C 437	EETC1EM-106ZJC	E CAPACITOR		
	C 438	FQDYB1CM-103Y	C CAPACITOR		
	C 439	QETN1EM-106Z	E CAPACITOR	10MF 20% 25V	
	C 440	QETN1EM-106Z	E CAPACITOR	10MF 20% 25V	
	C 441	QTE1V06-106Z	E CAPACITOR		
	C 442	QTE1V06-106Z	E CAPACITOR		
	C 443	QETN1HM-225Z	E CAPACITOR	2.2MF 20% 50V	
	C 444	QETN1HM-225Z	E CAPACITOR	2.2MF 20% 50V	
	C 445	QETN1EM-106Z	E CAPACITOR	10MF 20% 25V	
	C 446	QETN1EM-106Z	E CAPACITOR	10MF 20% 25V	
	C 447	QTE1V06-106Z	E CAPACITOR		
	C 448	QTE1V06-106Z	E CAPACITOR		
	C 449	QETN1HM-225Z	E CAPACITOR	2.2MF 20% 50V	
	C 450	QETN1HM-225Z	E CAPACITOR	2.2MF 20% 50V	
	C 453	QFVJ1HJ-154Z	TF CAPACITOR	.15MF 5% 50V	
	C 454	QFVJ1HJ-154Z	TF CAPACITOR	.15MF 5% 50V	
	C 455	QFVJ1HJ-274Z	CAPACITOR	.27MF 5% 50V	
	C 456	QFVJ1HJ-274Z	CAPACITOR	.27MF 5% 50V	
	C 457	QFLM1HJ-223Z	M CAPACITOR	.022MF 5% 50V	
	C 458	QFLM1HJ-223Z	M CAPACITOR	.022MF 5% 50V	
	C 459	QFLM1HJ-183Z	M CAPACITOR	.018MF 5% 50V	
	C 460	QFLM1HJ-183Z	M CAPACITOR	.018MF 5% 50V	
	C 461	QFLM1HJ-562Z	M CAPACITOR	5600PF 5% 50V	
	C 462	QFLM1HJ-562Z	M CAPACITOR	5600PF 5% 50V	
	C 466	QETN1HM-475Z	E CAPACITOR	4.7MF 20% 50V	
	C 467	QETN1HM-225Z	E CAPACITOR	2.2MF 20% 50V	
	C 468	EETC1EM-226ZJC	E CAPACITOR		
	C 469	QFLM1HJ-683Z	M CAPACITOR	.068MF 5% 50V	
	C 470	QFVJ1HJ-274Z	CAPACITOR	.27MF 5% 50V	
	C 471	QETN1EM-106Z	E CAPACITOR	10MF 20% 25V	
	C 472	QETN1EM-106Z	E CAPACITOR	10MF 20% 25V	
	C 473	QETN1EM-106Z	E CAPACITOR	10MF 20% 25V	
	C 474	QETN1EM-106Z	E CAPACITOR	10MF 20% 25V	

⚠	Item	Parts number	Parts name	Remarks	Area
	C 475	EETC1HM-105ZJC	E CAPACITOR		
	C 476	QFLM1HJ-682Z	M CAPACITOR	6800PF 5% 50V	
	C 488	EETC1HM-226ZJC	E CAPACITOR		
	C 526	EETC1AM-107ZJC	E CAPACITOR		
	C 527	QFLM1HJ-104Z	M CAPACITOR	.10MF 5% 50V	
	C 528	QFLM1HJ-104Z	M CAPACITOR	.10MF 5% 50V	
	C 529	QFLM1HJ-104Z	M CAPACITOR	.10MF 5% 50V	
	C 530	QFLM1HJ-104Z	M CAPACITOR	.10MF 5% 50V	
	C 531	QTE1C06-476Z	E CAPACITOR		
	C 532	QTE1C06-476Z	E CAPACITOR		
	C 535	EETC1AM-107ZJC	E CAPACITOR		
	C 579	QETN1HM-474Z	E CAPACITOR	.47MF 20% 50V	
	C 580	QFVJ1HJ-184Z	TF CAPACITOR	.18MF 5% 50V	
	C 581	EETC1HM-105ZJC	E CAPACITOR		
	C 703	QCBB1HK-471Y	C CAPACITOR	470PF 10% 50V	
	C 704	QCBB1HK-471Y	C CAPACITOR	470PF 10% 50V	
	C 705	FQCSB1HJ-220Y	C.CAPACITOR		
	C 706	FQCSB1HJ-220Y	C.CAPACITOR		
	C 707	QETN1CM-476Z	E CAPACITOR	47MF 20% 16V	
	C 708	QETN1CM-476Z	E CAPACITOR	47MF 20% 16V	
	C 709	FQCSB1HJ-100Y	C CAPACITOR		
	C 710	FQCSB1HJ-100Y	C CAPACITOR		
	C 711	QETN1JM-476Z	E CAPACITOR	47MF 20% 63V	
	C 712	QETN1JM-476Z	E CAPACITOR	47MF 20% 63V	
	C 713	QFLM1HJ-473Z	M CAPACITOR	.047MF 5% 50V	
	C 714	QFLM1HJ-473Z	M CAPACITOR	.047MF 5% 50V	
	C 715	QFLM1HJ-473Z	M CAPACITOR	.047MF 5% 50V	
	C 716	QFLM1HJ-473Z	M CAPACITOR	.047MF 5% 50V	
	C 721	QTE1V06-106Z	E CAPACITOR		
	C 722	QTE1V06-106Z	E CAPACITOR		
	C 723	EETC1HM-226ZJC	E CAPACITOR		
	C 726	EETC1EM-106ZJC	E CAPACITOR		
	C 729	EETC1CM-476ZJC	E CAPACITOR		
	C 730	FQCF31HZ-223Z	D.CAPACITOR		
	C 731	FQCF31HZ-223Z	D.CAPACITOR		
	C 732	FQDXB1CM-222Y	C CAPACITOR		
	C 733	QFLM1HJ-104Z	M CAPACITOR	.10MF 5% 50V	
	C 734	FQDXB1CM-222Y	C CAPACITOR		
	C 735	QFLM1HJ-104Z	M CAPACITOR	.10MF 5% 50V	
	C 739	QFLM1HJ-473Z	M CAPACITOR	.047MF 5% 50V	
	C 742	EETC1HM-224ZJC	E CAPACITOR		
	C 743	QFLM1HJ-823Z	M CAPACITOR	.082MF 5% 50V	
	CN315	QGF1205F1-10	CONNECTOR		
	CN612	QGB2510J1-04	CONNECTOR		
	CN701	QGB2510K2-07	CONNECTOR		
	CN702	QGB2510K2-10	CONNECTOR		
	CN711	QGB2510J1-07	CONNECTOR		
	CN712	QGB2510J1-10	CONNECTOR		
	CN870	QGB1214J1-20S	CONNECTOR		
	CN871	QGB1214J1-20S	CONNECTOR		
	CN912	QGD2503F1-05	SOCKET		
	C1022	FQDGB1HK-102Y	C CAPACITOR		
	C1023	FQDGB1HK-102Y	C CAPACITOR		
	C1034	QFLM1HJ-104Z	M CAPACITOR	.10MF 5% 50V	
	C1035	EETC1AM-107ZJC	E CAPACITOR		
	C1036	QCBB1HK-101Y	C CAPACITOR	100PF 10% 50V	
	C1037	FQDYB1CM-103Y	C CAPACITOR		
	C1038	FQDXB1CM-472Y	C CAPACITOR		
	C1039	FQDYB1CM-103Y	C CAPACITOR		
	C1040	FQDXB1CM-332Y	C CAPACITOR		
	C1041	FQDYB1CM-103Y	C CAPACITOR		
	C1042	EETC1EM-226ZJC	E CAPACITOR		
	C1043	QFVJ1HJ-474Z	CAPACITOR	.47MF 5% 50V	

■ Electrical parts list (Power supplly&input/output board) Block No. 01

⚠	Item	Parts number	Parts name	Remarks	Area
	C1044	FQDYB1CM-103Y	C CAPACITOR		
	C1045	QETN1HM-225Z	E CAPACITOR	2.2MF 20% 50V	
	C1061	QETN1AM-227Z	E CAPACITOR	220MF 20% 10V	
	C1062	EETC1AM-107ZJC	E CAPACITOR		
	C1063	EETC1HM-475ZJC	E CAPACITOR		
	C1064	QCBB1HK-151Y	C CAPACITOR	150PF 10% 50V	
	C1065	QCBB1HK-151Y	C CAPACITOR	150PF 10% 50V	
	C1066	QCBB1HK-331Y	C CAPACITOR	330PF 10% 50V	
	C1067	QETN1HM-225Z	E CAPACITOR	2.2MF 20% 50V	
	C1068	QETN1HM-224Z	E CAPACITOR	.22MF 20% 50V	
	C1069	QETN1HM-475Z	E CAPACITOR	4.7MF 20% 50V	
⚠	D 201	1N5402M-20	DIODE		
⚠	D 202	1N5402M-20	DIODE		
⚠	D 203	1N5402M-20	DIODE		
⚠	D 204	1N5402M-20	DIODE		
⚠	D 211	1N5402M-20	DIODE		
⚠	D 212	1N5402M-20	DIODE		
⚠	D 213	1N5402M-20	DIODE		
⚠	D 214	1N5402M-20	DIODE		
⚠	D 217	1N4003S-T5	SI DIODE		
⚠	D 218	1N4003S-T5	SI DIODE		
	D 219	MTZJ33C-T2	Z DIODE		
	D 220	MTZJ9.1B-T2	ZENER DIODE		
	D 221	MTZJ5.1B-T2	ZENER DIODE		
	D 223	1SS133-T2	SI DIODE		
⚠	D 227	1N4003S-T5	SI DIODE		
⚠	D 233	2A02-M	DIODE	S4 CCT	
⚠	D 234	2A02-M	DIODE	S4 CCT	
	D 411	1SS133-T2	SI DIODE		
	D 412	1SS133-T2	SI DIODE		
	D 426	MTZJ5.1B-T2	ZENER DIODE		
	D 431	1SS133-T2	SI DIODE		
	D 432	1SS133-T2	SI DIODE		
	D 433	1SS133-T2	SI DIODE		
	D 434	MTZJ5.1B-T2	ZENER DIODE		
	D 434	MTZJ5.1B-T2	ZENER DIODE		
	D 573	1SS133-T2	SI DIODE		
	D 703	MTZJ15C-T2	Z DIODE		
	D 704	MTZJ15C-T2	Z DIODE		
	D 719	1SS133-T2	SI DIODE		
	D 720	1SS133-T2	SI DIODE		
	D 723	MTZJ33C-T2	Z DIODE		
	D 724	MTZJ33C-T2	Z DIODE I M		
	D 725	1SS133-T2	SI DIODE		
	D 728	1SS133-T2	SI DIODE		
	D 742	MTZJ2.4B-T2	Z.DIODE		
	D1021	MTZJ5.1B-T2	ZENER DIODE		
	D1022	MTZJ2.4B-T2	ZENER DIODE		
	D1061	1SS133-T2	SI DIODE		
	FT111	QNG0020-001Z	FUSE CLIP		
	FT112	QNG0020-001Z	FUSE CLIP		
	FT131	QNG0020-001Z	FUSE CLIP		
	FT132	QNG0020-001Z	FUSE CLIP		
	FT511	QNG0020-001Z	FUSE CLIP		
	FT512	QNG0020-001Z	FUSE CLIP		
	FT521	QNG0020-001Z	FUSE CLIP		
	FT522	QNG0020-001Z	FUSE CLIP		
	FW431	QUM156-14Z4Z4	FLAT WIRE		
	FW703	QUM156-14DGZ4	FLAT WIRE		
	FW704	QUM154-15DGZ4	FLAT WIRE		
	FW705	QUM156-11Z4Z4	FLAT WIRE		
	FW902	QUM155-32DGZ4	FLAT WIRE		
	IC436	TDA7439	IC		

⚠	Item	Parts number	Parts name	Remarks	Area
	IC466	BA3837	IC(VOCALFADER)		
	IC526	BA15218	IC		
⚠	IC701	STK412-000	IC(HYBRID)		
	IC901	NJM4580L	IC		
	IC902	BU9253AS	IC		
	J 81	QNB0098-001	SPK TERMINAL		
	J 411	QNN0117-001	PIN JACK		
	J 426	GP1FA550TZ	OPT TRANSMITTER		
	J1021	QNS0080-001	6.3 JACK		
	J1022	QNS0080-001	6.3 JACK		
	L 701	QQLZ005-R45	INDUCTOR		
	L 702	QQLZ005-R45	INDUCTOR		
	O 201	KTA1023/OY/-T	TRANSISTOR		
	O 203	KRC107M-T	D.TRANSISTOR		
	O 204	KTC3199/GL/-T	TRANSISTOR		
	O 240	KTC3199/GL/-T	TRANSISTOR		
	O 401	2SC3576-JVC-T	TRANSISTOR		
	O 402	2SC3576-JVC-T	TRANSISTOR		
	O 483	KRA101M-T	TRANSISTOR		
	O 561	2SC3576-JVC-T	TRANSISTOR		
	O 562	2SC3576-JVC-T	TRANSISTOR		
	O 571	2SC2785/FE/-T	TRANSISTOR		
	O 572	2SC2785/FE/-T	TRANSISTOR		
	O 573	2SC2785/FE/-T	TRANSISTOR		
	O 574	2SC2785/FE/-T	TRANSISTOR		
	O 575	2SC2785/FE/-T	TRANSISTOR		
	O 576	2SC2785/FE/-T	TRANSISTOR		
	O 577	KRC111M-T	TRANSISTOR		
	O 578	KRC111M-T	TRANSISTOR		
	Q 579	KRC111M-T	TRANSISTOR		
	O 580	KRC111M-T	TRANSISTOR		
	O 581	KRC111M-T	TRANSISTOR		
	O 582	KRC111M-T	TRANSISTOR		
	O 701	KTA1268/GL/-T	TRANSISTOR		
	Q 702	KTA1268/GL/-T	TRANSISTOR		
	O 710	2SA1038S/SE/-T	TRANSISTOR		
	O 711	KTC3200/GL/-T	TRANSISTOR		
	O 712	KTA1268/GL/-T	TRANSISTOR		
	O 713	2SC2389S/SE/-T	TRANSISTOR		
	Q 726	2SC2389S/SE/-T	TRANSISTOR		
	O 727	KTA1268/GL/-T	TRANSISTOR		
	O 728	KTC3199/GL/-T	TRANSISTOR		
	O 733	2SC3576-JVC-T	TRANSISTOR		
	Q 734	2SC3576-JVC-T	TRANSISTOR		
	O 735	2SC3576-JVC-T	TRANSISTOR		
	O 736	2SC3576-JVC-T	TRANSISTOR		
	O 737	KRA111M-T	D.TRANSISTOR		
	O 742	2SK301/PQ/-T	TRANSISTOR(FET)		
	Q1021	KRA111M-T	D.TRANSISTOR		
	O1022	KRA111M-T	D.TRANSISTOR		
	O1023	KRA111M-T	D.TRANSISTOR		
	O1061	2SD2144S/VW/-T	TRANSISTOR		
⚠	R 202	QRZ9042-2R2X	F RESISTOR	2.2 1/0W	
	R 203	QRE141J-302Y	C RESISTOR	3.0K 5% 1/4W	
	R 204	QRE141J-223Y	C RESISTOR	22K 5% 1/4W	
	R 205	QRE141J-104Y	C RESISTOR	100K 5% 1/4W	
	R 206	QRE141J-562Y	C RESISTOR	5.6K 5% 1/4W	
	R 207	QRE141J-123Y	C RESISTOR	12K 5% 1/4W	
	R 209	QRE141J-103Y	C RESISTOR	10K 5% 1/4W	
	R 210	QRE141J-123Y	C RESISTOR	12K 5% 1/4W	
	R 215	QRE141J-473Y	C RESISTOR	47K 5% 1/4W	
	R 216	QRE141J-473Y	C RESISTOR	47K 5% 1/4W	
	R 217	QRE141J-273Y	C RESISTOR	27K 5% 1/4W	

■ **Electrical parts list (Power supplly&input/output board)** **Block No. 01**

⚠	Item	Parts number	Parts name	Remarks	Area
	R 218	QRE141J-273Y	C RESISTOR	27K 5% 1/4W	
⚠	R 233	QRK126J-470X	C RESISTOR	47 5% 1/2W	
⚠	R 234	QRK126J-470X	C RESISTOR	47 5% 1/2W	
	R 242	QRE141J-103Y	C RESISTOR	10K 5% 1/4W	
⚠	R 246	QRK126J-1R0X	C RESISTOR	1.0 5% 1/2W	
⚠	R 247	QRK126J-1R0X	C RESISTOR	1.0 5% 1/2W	
	R 401	QRE141J-102Y	C RESISTOR	1.0K 5% 1/4W	
	R 402	QRE141J-102Y	C RESISTOR	1.0K 5% 1/4W	
	R 403	QRE141J-472Y	C RESISTOR	4.7K 5% 1/4W	
	R 404	QRE141J-472Y	C RESISTOR	4.7K 5% 1/4W	
	R 405	QRE141J-222Y	C RESISTOR	2.2K 5% 1/4W	
	R 406	QRE141J-222Y	C RESISTOR	2.2K 5% 1/4W	
	R 407	QRE141J-272Y	C RESISTOR	2.7K 5% 1/4W	
	R 408	QRE141J-5R6Y	C RESISTOR	5.6 5% 1/4W	
	R 411	QRE141J-103Y	C RESISTOR	10K 5% 1/4W	
	R 412	QRE141J-103Y	C RESISTOR	10K 5% 1/4W	
	R 413	QRE141J-683Y	C RESISTOR	68K 5% 1/4W	
	R 414	QRE141J-683Y	C RESISTOR	68K 5% 1/4W	
	R 426	QRE141J-391Y	C RESISTOR	390 5% 1/4W	
	R 431	QRE141J-303Y	C RESISTOR	30K 5% 1/4W	
	R 432	QRE141J-303Y	C RESISTOR	30K 5% 1/4W	
⚠	R 434	QRJ146J-4R7X	UNF C.RESISTOR	4.7 5% 1/4W	
	R 435	QRE141J-103Y	C RESISTOR	10K 5% 1/4W	
	R 436	QRE141J-103Y	C RESISTOR	10K 5% 1/4W	
	R 437	QRE141J-102Y	C RESISTOR	1.0K 5% 1/4W	
	R 438	QRE141J-272Y	C RESISTOR	2.7K 5% 1/4W	
	R 439	QRE141J-562Y	C RESISTOR	5.6K 5% 1/4W	
	R 440	QRE141J-562Y	C RESISTOR	5.6K 5% 1/4W	
	R 441	QRE141J-272Y	C RESISTOR	2.7K 5% 1/4W	
	R 442	QRE141J-103Y	C RESISTOR	10K 5% 1/4W	
	R 443	QRE141J-104Y	C RESISTOR	100K 5% 1/4W	
	R 444	QRE141J-104Y	C RESISTOR	100K 5% 1/4W	
	R 466	QRE141J-201Y	C RESISTOR	200 5% 1/4W	
	R 467	QRE141J-203Y	C RESISTOR	20K 5% 1/4W	
	R 468	QRE141J-203Y	C RESISTOR	20K 5% 1/4W	
	R 469	QRE141J-562Y	C RESISTOR	5.6K 5% 1/4W	
	R 470	QRE141J-562Y	C RESISTOR	5.6K 5% 1/4W	
	R 471	QRE141J-223Y	C RESISTOR	22K 5% 1/4W	
	R 472	QRE141J-102Y	C RESISTOR	1.0K 5% 1/4W	
	R 473	QRE141J-682Y	C RESISTOR	6.8K 5% 1/4W	
	R 474	QRE141J-513Y	C RESISTOR	51K 5% 1/4W	
	R 475	QRE141J-101Y	C RESISTOR	100 5% 1/4W	
	R 496	QRE141J-221Y	C RESISTOR	220 5% 1/4W	
	R 526	QRE141J-101Y	C RESISTOR	100 5% 1/4W	
	R 527	QRE141J-222Y	C RESISTOR	2.2K 5% 1/4W	
	R 528	QRE141J-222Y	C RESISTOR	2.2K 5% 1/4W	
	R 529	QRE141J-332Y	C RESISTOR	3.3K 5% 1/4W	
	R 530	QRE141J-332Y	C RESISTOR	3.3K 5% 1/4W	
	R 533	QRE141J-204Y	C RESISTOR	200K 5% 1/4W	
	R 534	QRE141J-204Y	C RESISTOR	200K 5% 1/4W	
	R 535	QRE141J-113Y	C RESISTOR	11K 5% 1/4W	
	R 536	QRE141J-113Y	C RESISTOR	11K 5% 1/4W	
	R 537	QRE141J-101Y	C RESISTOR	100 5% 1/4W	
	R 551	QRE141J-102Y	C RESISTOR	1.0K 5% 1/4W	
	R 552	QRE141J-102Y	C RESISTOR	1.0K 5% 1/4W	
	R 553	QRE141J-223Y	C RESISTOR	22K 5% 1/4W	
	R 554	QRE141J-223Y	C RESISTOR	22K 5% 1/4W	
	R 561	QRE141J-221Y	C RESISTOR	220 5% 1/4W	
	R 562	QRE141J-221Y	C RESISTOR	220 5% 1/4W	
	R 581	QRE141J-224Y	C RESISTOR	220K 5% 1/4W	
	R 582	QRE141J-101Y	C RESISTOR	100 5% 1/4W	
	R 583	QRE141J-101Y	C RESISTOR	100 5% 1/4W	
	R 584	QRE141J-222Y	C RESISTOR	2.2K 5% 1/4W	

⚠	Item	Parts number	Parts name	Remarks	Area
	R 585	QRE141J-242Y	C RESISTOR	2.4K 5% 1/4W	
	R 586	QRE141J-274Y	C RESISTOR	270K 5% 1/4W	
	R 588	QRE141J-224Y	C RESISTOR	220K 5% 1/4W	
	R 589	QRE141J-101Y	C RESISTOR	100 5% 1/4W	
	R 590	QRE141J-101Y	C RESISTOR	100 5% 1/4W	
	R 593	QRE141J-243Y	C RESISTOR	24K 5% 1/4W	
	R 594	QRE141J-243Y	C RESISTOR	24K 5% 1/4W	
	R 595	QRE141J-433Y	C RESISTOR	43K 5% 1/4W	
	R 596	QRE141J-433Y	C RESISTOR	43K 5% 1/4W	
	R 597	QRE141J-104Y	C RESISTOR	100K 5% 1/4W	
	R 598	QRE141J-104Y	C RESISTOR	100K 5% 1/4W	
	R 701	QRJ146J-470X	UNF C.RESISTOR	47 5% 1/4W	
	R 702	QRJ146J-470X	UNF C.RESISTOR	47 5% 1/4W	
	R 703	QRE141J-563Y	C RESISTOR	56K 5% 1/4W	
	R 704	QRE141J-563Y	C RESISTOR	56K 5% 1/4W	
	R 705	QRJ146J-821X	UNF C.RESISTOR	820 5% 1/4W	
	R 706	QRJ146J-821X	UNF C.RESISTOR	820 5% 1/4W	
	R 707	QRE141J-563Y	C RESISTOR	56K 5% 1/4W	
	R 708	QRE141J-563Y	C RESISTOR	56K 5% 1/4W	
	R 713	QRJ146J-100X	UNF.C RESISTOR	10 5% 1/4W	
	R 714	QRJ146J-100X	UNF.C RESISTOR	10 5% 1/4W	
	R 715	QRJ146J-100X	UNF.C RESISTOR	10 5% 1/4W	
	R 716	QRJ146J-100X	UNF.C RESISTOR	10 5% 1/4W	
	R 717	QRE141J-102Y	C RESISTOR	1.0K 5% 1/4W	
	R 718	QRE141J-102Y	C RESISTOR	1.0K 5% 1/4W	
	R 719	QRE141J-562Y	C RESISTOR	5.6K 5% 1/4W	
	R 720	QRE141J-562Y	C RESISTOR	5.6K 5% 1/4W	
	R 721	QRE141J-103Y	C RESISTOR	10K 5% 1/4W	
	R 722	QRE141J-103Y	C RESISTOR	10K 5% 1/4W	
	R 723	QRE141J-152Y	C RESISTOR	1.5K 5% 1/4W	
	R 724	QRE141J-152Y	C RESISTOR	1.5K 5% 1/4W	
	R 725	QRE141J-823Y	C RESISTOR	82K 5% 1/4W	
	R 726	QRE141J-104Y	C RESISTOR	100K 5% 1/4W	
	R 727	QRE141J-104Y	C RESISTOR	100K 5% 1/4W	
	R 728	QRE141J-103Y	C RESISTOR	10K 5% 1/4W	
	R 729	QRE141J-104Y	C RESISTOR	100K 5% 1/4W	
	R 730	QRE141J-103Y	C RESISTOR	10K 5% 1/4W	
⚠	R 731	QRJ146J-4R7X	UNF C.RESISTOR	4.7 5% 1/4W	
⚠	R 732	QRJ146J-4R7X	UNF C.RESISTOR	4.7 5% 1/4W	
	R 733	QRE141J-472Y	C RESISTOR	4.7K 5% 1/4W	
	R 734	QRE141J-472Y	C RESISTOR	4.7K 5% 1/4W	
	R 735	QRE141J-472Y	C RESISTOR	4.7K 5% 1/4W	
	R 736	QRE141J-472Y	C RESISTOR	4.7K 5% 1/4W	
	R 739	QRL01DJ-821X	OMF RESISTOR	820 5% 1/1W	
	R 740	QRL01DJ-821X	OMF RESISTOR	820 5% 1/1W	
	R 742	QRE141J-473Y	C RESISTOR	47K 5% 1/4W	
	R 743	QRE141J-153Y	C RESISTOR	15K 5% 1/4W	
	R 744	QRE141J-475Y	C RESISTOR	4.7M 5% 1/4W	
	R 745	QRE141J-105Y	C RESISTOR	1.0M 5% 1/4W	
	R 746	QRE141J-392Y	C RESISTOR	3.9K 5% 1/4W	
	R 747	QRE141J-203Y	C RESISTOR	20K 5% 1/4W	
	R 748	QRE141J-103Y	C RESISTOR	10K 5% 1/4W	
⚠	R 750	QRJ146J-470X	UNF C.RESISTOR	47 5% 1/4W	
	R 753	QRZ0196-R22	EMIT.RESISTOR	1/1W	
	R 754	QRZ0196-R22	EMIT.RESISTOR	1/1W	
	R 761	QRE141J-102Y	C RESISTOR	1.0K 5% 1/4W	
	R 762	QRE141J-102Y	C RESISTOR	1.0K 5% 1/4W	
	R 766	QRE141J-333Y	C RESISTOR	33K 5% 1/4W	
	R 767	QRE141J-103Y	C RESISTOR	10K 5% 1/4W	
	R 768	QRE141J-103Y	C RESISTOR	10K 5% 1/4W	
⚠	R 774	QRJ146J-100X	UNF.C RESISTOR	10 5% 1/4W	
	R 775	QRE141J-102Y	C RESISTOR	1.0K 5% 1/4W	
	R 776	QRE141J-102Y	C RESISTOR	1.0K 5% 1/4W	

■ **Electrical parts list (Power supplly&input/output board)** **Block No. 01**

⚠	Item	Parts number	Parts name	Remarks	Area
	R 777	QRE141J-103Y	C RESISTOR	10K 5% 1/4W	
	R 778	QRE141J-103Y	C RESISTOR	10K 5% 1/4W	
	R 784	QRE141J-823Y	C RESISTOR	82K 5% 1/4W	
	R 785	QRE141J-823Y	C RESISTOR	82K 5% 1/4W	
	R 786	QRE141J-103Y	C RESISTOR	10K 5% 1/4W	
	R 787	QRE141J-103Y	C RESISTOR	10K 5% 1/4W	
	RY 1	QSK0109-001	RELAY		
	R1021	QRE141J-472Y	C RESISTOR	4.7K 5% 1/4W	
	R1022	QRE141J-472Y	C RESISTOR	4.7K 5% 1/4W	
	R1031	QRE141J-203Y	C RESISTOR	20K 5% 1/4W	
	R1032	QRE141J-203Y	C RESISTOR	20K 5% 1/4W	
	R1033	QRE141J-822Y	C RESISTOR	8.2K 5% 1/4W	
	R1034	QRE141J-103Y	C RESISTOR	10K 5% 1/4W	
	R1035	QRE141J-333Y	C RESISTOR	33K 5% 1/4W	
	R1036	QRE141J-392Y	C RESISTOR	3.9K 5% 1/4W	
	R1037	QRE141J-153Y	C RESISTOR	15K 5% 1/4W	
	R1038	QRE141J-472Y	C RESISTOR	4.7K 5% 1/4W	
	R1039	QRE141J-103Y	C RESISTOR	10K 5% 1/4W	
	R1040	QRE141J-272Y	C RESISTOR	2.7K 5% 1/4W	
	R1041	QRE141J-203Y	C RESISTOR	20K 5% 1/4W	
	R1042	QRE141J-221Y	C RESISTOR	220 5% 1/4W	
	R1043	QRE141J-203Y	C RESISTOR	20K 5% 1/4W	
	R1044	QRE141J-562Y	C RESISTOR	5.6K 5% 1/4W	
	R1045	QRE141J-102Y	C RESISTOR	1.0K 5% 1/4W	
	R1061	QRE141J-103Y	C RESISTOR	10K 5% 1/4W	
	R1062	QRE141J-123Y	C RESISTOR	12K 5% 1/4W	
	R1063	QRE141J-391Y	C RESISTOR	390 5% 1/4W	
	R1064	QRE141J-152Y	C RESISTOR	1.5K 5% 1/4W	
	R1065	QRE141J-101Y	C RESISTOR	100 5% 1/4W	
	R1066	QRE141J-475Y	C RESISTOR	4.7M 5% 1/4W	
	R1067	QRE141J-560Y	C RESISTOR	56 5% 1/4W	
	R1068	QRE141J-203Y	C RESISTOR	20K 5% 1/4W	
	R1069	QRE141J-102Y	C RESISTOR	1.0K 5% 1/4W	
	R1070	QRE141J-561Y	C RESISTOR	560 5% 1/4W	
	R1071	QRE141J-472Y	C RESISTOR	4.7K 5% 1/4W	
	R1072	QRE141J-472Y	C RESISTOR	4.7K 5% 1/4W	
	R1073	QRE141J-103Y	C RESISTOR	10K 5% 1/4W	
	R1074	QRE141J-152Y	C RESISTOR	1.5K 5% 1/4W	
⚠	S 500	QSW0812-001	PUSH SWITCH		
	SP210	E3400-431	SPACER		
	SP431	VYSA1R4-058	SPACER		
	SP434	E3400-431	SPACER		
	TB101	QNZ0079-001Z	TAB		
	TB102	QNZ0079-001Z	TAB		
	VR901	QVQ0045-B54	V RESISTOR		

■ **Electrical parts list (Main & pri-AMP. board)** **Block No. 02**

⚠	Item	Parts number	Parts name	Remarks	Area
	C 350	FQDYB1CM-103Y	C CAPACITOR		
	C 351	EETC1HM-226ZJC	E CAPACITOR		
	C 352	EETC1HM-226ZJC	E CAPACITOR		
	C 360	QETN1CM-476Z	E CAPACITOR	47MF 20% 16V	
	C 361	FQDYB1CM-103Y	C CAPACITOR		
	C 362	EETC1HM-226ZJC	E CAPACITOR		
	C 366	EETC1HM-226ZJC	E CAPACITOR		
	C 367	FQDYB1CM-103Y	C CAPACITOR		
	C 370	FQDYB1CM-103Y	C CAPACITOR		
	C 371	EETC1HM-226ZJC	E CAPACITOR		
	C 372	EETC1HM-226ZJC	E CAPACITOR		
	C 373	FQDYB1CM-103Y	C CAPACITOR		
	C 374	EETC1HM-226ZJC	E CAPACITOR		
	C 801	QFLM1HJ-103Z	M CAPACITOR	.010MF 5% 50V	
	C 803	QETN0JM-477Z	E CAPACITOR	470MF 20% 6.3V	
	C 804	QETN0JM-108Z	E CAPACITOR	1000MF 20% 6.3V	
	C 805	FQDGB1HK-102Y	C CAPACITOR		
	C 806	FQDGB1HK-102Y	C CAPACITOR		
	C 807	QCS11HJ-390	C CAPACITOR	39PF 5% 50V	
	C 808	FQCSB1HJ-330Y	C CAPACITOR		
	C 809	FQCSB1HJ-330Y	C CAPACITOR		
	C 810	QCS11HJ-390	C CAPACITOR	39PF 5% 50V	
	C 811	FQDGB1HK-102Y	C CAPACITOR		
	C 812	FQCSB1HJ-220Y	C CAPACITOR		
	C 813	FQCSB1HJ-270Y	C CAPACITOR		
	C 814	QETN0JM-108Z	E CAPACITOR	1000MF 20% 6.3V	
	C 815	EETC1HM-226ZJC	E CAPACITOR		
	C 816	EETC1CM-476ZJC	E CAPACITOR		
	C 817	EETC1HM-226ZJC	E CAPACITOR		
	C 820	QCZ0205-155Z	ML C CAPACITOR	1.5MF	
	C 821	FQDYB1CM-103Y	C CAPACITOR		
	C 823	QFVJ1HJ-334Z	M CAPACITOR	.33MF 5% 50V	
	C 831	FQDYB1CM-103Y	C CAPACITOR		
	C 832	FQDYB1CM-103Y	C CAPACITOR		
	C 834	EEKC1HM-226ZJC	E CAPACITOR		
	C 835	FQDGB1HK-102Y	C CAPACITOR		
	C 855	EETC0JM-227ZJC	E CAPACITOR		
	C 856	EETC1AM-107ZJC	E CAPACITOR		
	C 857	EEKC1CM-476ZJC	E CAPACITOR		
	C 862	EEKC1HM-475ZJC	E CAPACITOR		
	C 870	FQDYB1CM-103Y	C CAPACITOR		
	C 871	EETC1HM-475ZJC	E CAPACITOR		
	C 872	EEKC1HM-224ZJC	E CAPACITOR		
	C 876	EETC1HM-105ZJC	E CAPACITOR		
	C 877	FQDGB1HK-681Y	C CAPACITOR		
	C 878	FQDXB1CM-182Y	C CAPACITOR		
	C 879	FQCSB1HJ-330Y	C CAPACITOR		
	C 880	QFLM1HJ-153Z	M CAPACITOR	.015MF 5% 50V	
	C 881	EEKC1HM-225ZJC	E CAPACITOR		
	C 882	EEKC1HM-225ZJC	E CAPACITOR		
	C 883	QFLM1HJ-104Z	M CAPACITOR	.10MF 5% 50V	
	C 884	QETN1AM-227Z	E CAPACITOR	220MF 20% 10V	
	C 885	QFLM1HJ-103Z	M CAPACITOR	.010MF 5% 50V	
	C 886	QFLM1HJ-103Z	M CAPACITOR	.010MF 5% 50V	
	C 887	QFVJ1HJ-104Z	TF CAPACITOR	.10MF 5% 50V	
	C 889	EEKC1HM-105ZJC	E CAPACITOR		
	C 890	FQDGB1HK-102Y	C CAPACITOR		
	C 950	FQDYB1CM-103Y	C CAPACITOR		
	C 951	FQDYB1CM-103Y	C CAPACITOR		
	C 991	FQDYB1CM-103Y	C CAPACITOR		
	C 992	FQDYB1CM-103Y	C CAPACITOR		
	CN602	QGB2510K2-04	CONNECTOR		
	CN713	VMC0107-R06	4P PLUG ASSY		

⚠	Item	Parts number	Parts name	Remarks	Area
	CN815	QGD2504C1-03Z	SOCKET		
	CN850	QGD2504C1-03Z	SOCKET		
	CN851	QGD2504C1-04Z	SOCKET		
	CN860	QGB1214K1-20S	CONNECTOR		
	CN861	QGB1214K1-20S	CONNECTOR		
	CN862	QGD2504C1-03Z	SOCKET		
	CN863	QGD2504C1-03Z	SOCKET		
	CN865	QGF1205C1-09	CONNECTOR		
	CN867	QGA2501C1-02	2P CONNECTOR		
	CN868	QGF1016C1-19	CONNECTOR		
	CN869	QGF1205C1-11	CONNECTOR		
	CN879	QGF1031C1-09S	FFC/FPC CONNE		
	CN880	QGF1205C1-11	CONNECTOR		
	CN883	QGD2504C1-03Z	SOCKET		
	CN884	QGD2504C1-03Z	SOCKET		
	CN900	QGD2504C1-04Z	SOCKET		
	CN901	QGD2504C1-04Z	SOCKET		
	CN905	QGF1205C1-11	CONNECTOR		
	CN906	QGF1205C1-11	CONNECTOR		
	CN979	QGF1016F1-09	CONNECTOR		
	CN990	QGF1205F1-11	CONNECTOR		
	C1003	FQDGB1HK-102Y	C CAPACITOR		
	C1004	FQDGB1HK-102Y	C CAPACITOR		
	C1005	FQDGB1HK-102Y	C CAPACITOR		
	C1006	FQDGB1HK-102Y	C CAPACITOR		
	D 350	MTZJ11C-T2	ZENER DIODE		
	D 351	MTZJ12C-T2	ZENER DIODE		
	D 360	MTZJ5.1B-T2	ZENER DIODE		
	D 361	MTZJ11C-T2	ZENER DIODE		
	D 362	MTZJ6.8C-T2	ZENER DIODE		
	D 365	MTZJ9.1B-T2	ZENER DIODE		
	D 366	MTZJ11C-T2	ZENER DIODE		
	D 367	MTZJ10C-T2	ZENER DIODE		
	D 368	MTZJ11C-T2	ZENER DIODE		
	D 369	MTZJ10C-T2	ZENER DIODE		
	D 370	MTZJ11C-T2	ZENER DIODE		
	D 801	1N4003S-T5	SI DIODE		
	D 803	1SS119-02-T2	SI DIODE		
	D 804	1SS133-T2	SI DIODE		
	D 805	1SS133-T2	SI DIODE		
	D 831	MTZJ5.1B-T2	ZENER DIODE		
	D 832	MTZJ5.1B-T2	ZENER DIODE		
	D 853	MTZJ8.2C-T2	ZENER DIODE		
	D 860	1SS133-T2	SI DIODE		
	D 871	1SS133-T2	SI DIODE		
	D 872	1SS133-T2	SI DIODE		
	D 873	1SS133-T2	SI DIODE		
	D 955	SLR-342MC-T	LED		
	D 956	SLR-342MC-T	LED		
	D 957	SLR-342MC-T	LED		
	D 958	SLR-342MC-T	LED		
	D 961	1SS133-T2	SI DIODE		
	D 962	SLA-370LT3F	LED	POWER LED	
	D 981	SLR-342MC-T	LED		
	D 982	SLR-342MC-T	LED		
	D 983	SLR-342MC-T	LED		
	D 984	SLR-342MC-T	LED		
	EP201	E409182-001SM	GRAND TERMINAL		
	FL801	QLF0074-001	FL TUBE		
	FW714	QUM155-11DGZ4	FLAT WIRE		
	FW850	QUM153-06Z4Z4	FLAT WIRE		
	FW862	QUM026-26DGZ4	FLAT WIRE		
	FW883	QUM026-26DGZ4	FLAT WIRE		

■ Electrical parts list (Main & pri-AMP. board)

Block No. 02

⚠	Item	Parts number	Parts name	Remarks	Area
	FW915	QUM153-12DGZ4	FLAT WIRE		
	FW950	QUM157-11DGZ4	FLAT WIRE		
	FW951	QUM154-06Z4Z4	FLAT WIRE		
	FW952	QUM024-16DGZ4	PARA RIBON WIRE		
	IC810	MN101C35DEB	IC		
	IC811	BU4094BC	IC		
	IC853	LB1641	IC		
	IC915	GP1U281X	IC		
	JS950	QSW0857-001	ROTARY ENCODER		
	JS992	QSW0857-001	ROTARY ENCODER		
	J1001	QNS0159-001	3.5 JACK		
	L 801	QQL29BJ-100Z	INDUCTOR		
	L 802	QQL231K-220Y	INDUCTOR		
	L 803	QQL29BJ-100Z	INDUCTOR		
	L 805	QQL29BJ-100Z	INDUCTOR		
	L 806	QQL29BJ-100Z	INDUCTOR		
	L 807	QQR0779-001Z	INDUCTOR		
	L 851	QQL29BJ-100Z	INDUCTOR		
	L 870	QQR0779-001Z	INDUCTOR		
	L1003	QQL231K-2R2Y	INDUCTOR		
	O 350	KRC104M-T	D.TRANSISTOR		
	O 351	KRA104M-T	D.TRANSISTOR		
	O 352	KTC3199/GL/-T	TRANSISTOR		
	O 353	2SD2395/EF/	TRANSISTOR		
	O 360	2SD2395/EF/	TRANSISTOR		
	O 361	KTC3199/GL/-T	TRANSISTOR		
	O 362	KTC3199/GL/-T	TRANSISTOR		
	O 366	2SD2395/EF/	TRANSISTOR		
	O 367	KTA1267/YG/-T	TRANSISTOR		
	Q 368	KTC3199/GL/-T	TRANSISTOR		
	O 369	2SD2395/EF/	TRANSISTOR		
	O 370	KTC3199/GL/-T	TRANSISTOR		
	O 372	KTA1023/OY/-T	TRANSISTOR		
	O 373	KRA104M-T	D.TRANSISTOR		
	Q 374	KRC104M-T	D.TRANSISTOR		
	O 375	KTA1267/YG/-T	TRANSISTOR		
	O 801	KTC3195/O/-T	TRANSISTOR		
	O 802	KTC3195/O/-T	TRANSISTOR		
	O 803	KRC102M-T	D.TRANSISTOR		
	Q 804	KRC102M-T	D.TRANSISTOR		
	O 805	KRC102M-T	D.TRANSISTOR		
	O 806	KRC102M-T	D.TRANSISTOR		
	O 807	KRC102M-T	D.TRANSISTOR		
	Q 808	KRC102M-T	D.TRANSISTOR		
	O 809	KRC102M-T	D.TRANSISTOR		
	O 810	KRC102M-T	D.TRANSISTOR		
	O 811	KRC102M-T	D.TRANSISTOR		
	O 851	KTC3199/GL/-T	TRANSISTOR		
	Q 860	KTC3199/GL/-T	TRANSISTOR		
	O 870	2SA1175/HFE/-T	TRANSISTOR		
	O 871	KTC3199/GL/-T	TRANSISTOR		
	O 872	KRC107M-T	D.TRANSISTOR		
	O 873	KTC3199/GL/-T	TRANSISTOR		
	O 874	KTC3199/GL/-T	TRANSISTOR		
	O 875	KRC102M-T	D.TRANSISTOR		
	O 877	KRC114M-T	TRANSISTOR		
	O 878	KRA102M-T	D.TRANSISTOR		
	O 879	KRA102M-T	D.TRANSISTOR		
	O 880	KRC102M-T	D.TRANSISTOR		
	O 905	KRC104M-T	D.TRANSISTOR		
	O 906	KRC104M-T	D.TRANSISTOR		
	O 961	KRA102M-T	D.TRANSISTOR		
	R 350	QRE141J-103Y	C RESISTOR	10K 5% 1/4W	

⚠	Item	Parts number	Parts name	Remarks	Area
	R 351	QRE141J-561Y	C RESISTOR	560 5% 1/4W	
	R 352	QRE141J-562Y	C RESISTOR	5.6K 5% 1/4W	
⚠	R 360	QRZ9042-2R2X	F RESISTOR	2.2 1/0W	
⚠	R 361	QRZ9006-4R7X	F RESISTOR	4.7 1/0W	
	R 362	QRE141J-331Y	C RESISTOR	330 5% 1/4W	
	R 363	QRE141J-331Y	C RESISTOR	330 5% 1/4W	
	R 364	QRE141J-122Y	C RESISTOR	1.2K 5% 1/4W	
	R 365	QRE141J-201Y	C RESISTOR	200 5% 1/4W	
	R 366	QRE141J-201Y	C RESISTOR	200 5% 1/4W	
	R 367	QRE141J-122Y	C RESISTOR	1.2K 5% 1/4W	
	R 368	QRE141J-331Y	C RESISTOR	330 5% 1/4W	
	R 372	QRE141J-4R7Y	C RESISTOR	4.7 5% 1/4W	
	R 376	QRE141J-221Y	C RESISTOR	220 5% 1/4W	
	R 377	QRE141J-561Y	C RESISTOR	560 5% 1/4W	
	R 378	QRE141J-152Y	C RESISTOR	1.5K 5% 1/4W	
	R 381	QRE141J-182Y	C RESISTOR	1.8K 5% 1/4W	
	R 382	QRE141J-221Y	C RESISTOR	220 5% 1/4W	
	R 384	QRE141J-272Y	C RESISTOR	2.7K 5% 1/4W	
	R 385	QRE141J-562Y	C RESISTOR	5.6K 5% 1/4W	
	R 388	QRE141J-681Y	C RESISTOR	680 5% 1/4W	
	R 389	QRE141J-103Y	C RESISTOR	10K 5% 1/4W	
⚠	R 395	QRZ9042-2R2X	F RESISTOR	2.2 1/0W	
⚠	R 396	QRZ9042-2R2X	F RESISTOR	2.2 1/0W	
	R 801	QRE141J-331Y	C RESISTOR	330 5% 1/4W	
	R 802	QRE141J-223Y	C RESISTOR	22K 5% 1/4W	
	R 803	QRE141J-223Y	C RESISTOR	22K 5% 1/4W	
	R 804	QRE141J-822Y	C RESISTOR	8.2K 5% 1/4W	
	R 805	QRE141J-822Y	C RESISTOR	8.2K 5% 1/4W	
	R 806	QRE141J-124Y	C RESISTOR	120K 5% 1/4W	
	R 807	QRE141J-103Y	C RESISTOR	10K 5% 1/4W	
	R 808	QRE141J-103Y	C RESISTOR	10K 5% 1/4W	
	R 809	QRE141J-103Y	C RESISTOR	10K 5% 1/4W	
	R 810	QRE141J-103Y	C RESISTOR	10K 5% 1/4W	
	R 811	QRE141J-103Y	C RESISTOR	10K 5% 1/4W	
	R 812	QRE141J-103Y	C RESISTOR	10K 5% 1/4W	
	R 813	QRE141J-103Y	C RESISTOR	10K 5% 1/4W	
	R 814	QRE141J-562Y	C RESISTOR	5.6K 5% 1/4W	
	R 815	QRE141J-563Y	C RESISTOR	56K 5% 1/4W	
	R 816	QRE141J-563Y	C RESISTOR	56K 5% 1/4W	
	R 817	QRE141J-103Y	C RESISTOR	10K 5% 1/4W	
	R 818	QRE141J-103Y	C RESISTOR	10K 5% 1/4W	
	R 819	QRE141J-102Y	C RESISTOR	1.0K 5% 1/4W	
	R 820	QRE141J-102Y	C RESISTOR	1.0K 5% 1/4W	
	R 821	QRE141J-103Y	C RESISTOR	10K 5% 1/4W	
	R 822	QRE141J-103Y	C RESISTOR	10K 5% 1/4W	
	R 823	QRE141J-102Y	C RESISTOR	1.0K 5% 1/4W	
	R 824	QRE141J-102Y	C RESISTOR	1.0K 5% 1/4W	
	R 827	QRE141J-103Y	C RESISTOR	10K 5% 1/4W	
	R 831	QRE141J-104Y	C RESISTOR	100K 5% 1/4W	
	R 834	QRE141J-104Y	C RESISTOR	100K 5% 1/4W	
	R 835	QRE141J-104Y	C RESISTOR	100K 5% 1/4W	
	R 836	QRE141J-104Y	C RESISTOR	100K 5% 1/4W	
	R 837	QRE141J-104Y	C RESISTOR	100K 5% 1/4W	
	R 838	QRE141J-102Y	C RESISTOR	1.0K 5% 1/4W	
	R 839	QRE141J-102Y	C RESISTOR	1.0K 5% 1/4W	
	R 840	QRE141J-103Y	C RESISTOR	10K 5% 1/4W	
	R 841	QRE141J-103Y	C RESISTOR	10K 5% 1/4W	
	R 842	QRE141J-103Y	C RESISTOR	10K 5% 1/4W	
	R 844	QRE141J-103Y	C RESISTOR	10K 5% 1/4W	
	R 845	QRE141J-102Y	C RESISTOR	1.0K 5% 1/4W	
	R 846	QRE141J-102Y	C RESISTOR	1.0K 5% 1/4W	
	R 847	QRE141J-102Y	C RESISTOR	1.0K 5% 1/4W	
	R 848	QRE141J-331Y	C RESISTOR	330 5% 1/4W	

■ **Electrical parts list (Main & pri-AMP. board)** **Block No. 02**

⚠	Item	Parts number	Parts name	Remarks	Area
	R 849	QRE141J-102Y	C RESISTOR	1.0K 5% 1/4W	
	R 850	QRE141J-681Y	C RESISTOR	680 5% 1/4W	
	R 851	QRE141J-391Y	C RESISTOR	390 5% 1/4W	
	R 852	QRE141J-4R7Y	C RESISTOR	4.7 5% 1/4W	
	R 853	QRZ9042-2R2X	F.RESISTOR	2.2 1/0W	
	R 856	QRE141J-100Y	C RESISTOR	10 5% 1/4W	
	R 857	QRE141J-104Y	C RESISTOR	100K 5% 1/4W	
	R 858	QRE141J-104Y	C RESISTOR	100K 5% 1/4W	
	R 860	QRE141J-684Y	C RESISTOR	680K 5% 1/4W	
	R 861	QRE141J-103Y	C RESISTOR	10K 5% 1/4W	
	R 862	QRE141J-220Y	C RESISTOR	22 5% 1/4W	
	R 864	QRE141J-103Y	C RESISTOR	10K 5% 1/4W	
	R 870	QRE141J-473Y	C RESISTOR	47K 5% 1/4W	
	R 871	QRE141J-102Y	C RESISTOR	1.0K 5% 1/4W	
	R 872	QRE141J-103Y	C RESISTOR	10K 5% 1/4W	
	R 873	QRE141J-103Y	C RESISTOR	10K 5% 1/4W	
	R 874	QRE141J-182Y	C RESISTOR	1.8K 5% 1/4W	
	R 875	QRE141J-472Y	C RESISTOR	4.7K 5% 1/4W	
	R 876	QRE141J-103Y	C RESISTOR	10K 5% 1/4W	
	R 879	QRE141J-473Y	C RESISTOR	47K 5% 1/4W	
	R 880	QRE141J-225Y	C RESISTOR	2.2M 5% 1/4W	
	R 881	QRE141J-103Y	C RESISTOR	10K 5% 1/4W	
	R 882	QRE141J-104Y	C RESISTOR	100K 5% 1/4W	
	R 883	QRE141J-220Y	C RESISTOR	22 5% 1/4W	
	R 885	QRE141J-102Y	C RESISTOR	1.0K 5% 1/4W	
	R 886	QRE141J-102Y	C RESISTOR	1.0K 5% 1/4W	
	R 887	QRE141J-102Y	C RESISTOR	1.0K 5% 1/4W	
	R 888	QRE141J-102Y	C RESISTOR	1.0K 5% 1/4W	
	R 889	QRE141J-102Y	C RESISTOR	1.0K 5% 1/4W	
	R 891	QRE141J-104Y	C RESISTOR	100K 5% 1/4W	
	R 892	QRE141J-104Y	C RESISTOR	100K 5% 1/4W	
	R 893	QRE141J-183Y	C RESISTOR	18K 5% 1/4W	UX
	R 893	QRE141J-753Y	C RESISTOR	75K 5% 1/4W	US
	R 894	QRE141J-334Y	C RESISTOR	330K 5% 1/4W	US
	R 894	QRE141J-183Y	C RESISTOR	18K 5% 1/4W	UX
	R 895	QRE141J-152Y	C RESISTOR	1.5K 5% 1/4W	
	R 896	QRE141J-103Y	C RESISTOR	10K 5% 1/4W	
	R 897	QRE141J-152Y	C RESISTOR	1.5K 5% 1/4W	
	R 898	QRE141J-103Y	C RESISTOR	10K 5% 1/4W	
	R 899	QRE141J-4R3Y	C RESISTOR	4.3 5% 1/4W	
	R 905	QRE141J-104Y	C RESISTOR	100K 5% 1/4W	
	R 906	QRE141J-104Y	C RESISTOR	100K 5% 1/4W	
	R 921	QRE141J-102Y	C RESISTOR	1.0K 5% 1/4W	
	R 922	QRE141J-102Y	C RESISTOR	1.0K 5% 1/4W	
	R 923	QRE141J-122Y	C RESISTOR	1.2K 5% 1/4W	
	R 924	QRE141J-152Y	C RESISTOR	1.5K 5% 1/4W	
	R 925	QRE141J-222Y	C RESISTOR	2.2K 5% 1/4W	
	R 926	QRE141J-272Y	C RESISTOR	2.7K 5% 1/4W	
	R 927	QRE141J-392Y	C RESISTOR	3.9K 5% 1/4W	
	R 928	QRE141J-562Y	C RESISTOR	5.6K 5% 1/4W	
	R 931	QRE141J-202Y	C RESISTOR	2.0K 5% 1/4W	
	R 932	QRE141J-122Y	C RESISTOR	1.2K 5% 1/4W	
	R 933	QRE141J-152Y	C RESISTOR	1.5K 5% 1/4W	
	R 934	QRE141J-222Y	C RESISTOR	2.2K 5% 1/4W	
	R 935	QRE141J-272Y	C RESISTOR	2.7K 5% 1/4W	
	R 936	QRE141J-392Y	C RESISTOR	3.9K 5% 1/4W	
	R 937	QRE141J-562Y	C RESISTOR	5.6K 5% 1/4W	
	R 938	QRE141J-103Y	C RESISTOR	10K 5% 1/4W	
	R 939	QRE141J-103Y	C RESISTOR	10K 5% 1/4W	
	R 941	QRE141J-102Y	C RESISTOR	1.0K 5% 1/4W	
	R 942	QRE141J-102Y	C RESISTOR	1.0K 5% 1/4W	
	R 943	QRE141J-122Y	C RESISTOR	1.2K 5% 1/4W	
	R 944	QRE141J-152Y	C RESISTOR	1.5K 5% 1/4W	

⚠	Item	Parts number	Parts name	Remarks	Area
	R 945	QRE141J-222Y	C RESISTOR	2.2K 5% 1/4W	
	R 946	QRE141J-272Y	C RESISTOR	2.7K 5% 1/4W	
	R 951	QRE141J-183Y	C RESISTOR	18K 5% 1/4W	
	R 952	QRE141J-392Y	C RESISTOR	3.9K 5% 1/4W	
	R 953	QRE141J-562Y	C RESISTOR	5.6K 5% 1/4W	
	R 954	QRE141J-103Y	C RESISTOR	10K 5% 1/4W	
	R 955	QRE141J-680Y	C RESISTOR	68 5% 1/4W	
	R 956	QRE141J-680Y	C RESISTOR	68 5% 1/4W	
	R 961	QRE141J-201Y	C RESISTOR	200 5% 1/4W	
	R 962	QRE141J-103Y	C RESISTOR	10K 5% 1/4W	
	R 963	QRE141J-103Y	C RESISTOR	10K 5% 1/4W	
	R 964	QRE141J-334Y	C RESISTOR	330K 5% 1/4W	
	R 981	QRE141J-680Y	C RESISTOR	68 5% 1/4W	
	R 982	QRE141J-680Y	C RESISTOR	68 5% 1/4W	
	R 985	QRE141J-392Y	C RESISTOR	3.9K 5% 1/4W	
	R 986	QRE141J-562Y	C RESISTOR	5.6K 5% 1/4W	
	R 991	QRE141J-102Y	C RESISTOR	1.0K 5% 1/4W	
	R 992	QRE141J-102Y	C RESISTOR	1.0K 5% 1/4W	
	R 993	QRE141J-122Y	C RESISTOR	1.2K 5% 1/4W	
	R 994	QRE141J-152Y	C RESISTOR	1.5K 5% 1/4W	
	R 995	QRE141J-222Y	C RESISTOR	2.2K 5% 1/4W	
	R 996	QRE141J-272Y	C RESISTOR	2.7K 5% 1/4W	
	RA801	QRB169J-104	R.NETWORK	100K 5% 1/6W	
	RA802	QRB169J-104	R.NETWORK	100K 5% 1/6W	
	S 921	QSW0825-001Z	TACT SWITCH		
	S 922	QSW0825-001Z	TACT SWITCH		
	S 923	QSW0825-001Z	TACT SWITCH		
	S 924	QSW0825-001Z	TACT SWITCH		
	S 925	QSW0825-001Z	TACT SWITCH		
	S 926	QSW0825-001Z	TACT SWITCH		
	S 927	QSW0825-001Z	TACT SWITCH		
	S 928	QSW0825-001Z	TACT SWITCH		
	S 931	QSW0825-001Z	TACT SWITCH		
	S 932	QSW0825-001Z	TACT SWITCH		
	S 933	QSW0825-001Z	TACT SWITCH		
	S 934	QSW0825-001Z	TACT SWITCH		
	S 935	QSW0825-001Z	TACT SWITCH		
	S 936	QSW0825-001Z	TACT SWITCH		
	S 937	QSW0825-001Z	TACT SWITCH		
	S 938	QSW0825-001Z	TACT SWITCH		
	S 939	QSW0825-001Z	TACT SWITCH		
	S 941	QSW0825-001Z	TACT SWITCH		
	S 942	QSW0825-001Z	TACT SWITCH		
	S 943	QSW0825-001Z	TACT SWITCH		
	S 944	QSW0825-001Z	TACT SWITCH		
	S 945	QSW0825-001Z	TACT SWITCH		
	S 946	QSW0825-001Z	TACT SWITCH		
	S 948	QSW0518-001	PUSH SW	PANEL OP	
	S 949	QSW0122-001	PUSH SWITCH	PANEL CL	
	S 952	QSW0825-001Z	TACT SWITCH		
	S 953	QSW0825-001Z	TACT SWITCH		
	S 963	QSW0825-001Z	TACT SWITCH		
	S 985	QSW0825-001Z	TACT SWITCH		
	S 986	QSW0825-001Z	TACT SWITCH		
	S 991	QSW0825-001Z	TACT SWITCH		
	S 992	QSW0825-001Z	TACT SWITCH		
	S 993	QSW0825-001Z	TACT SWITCH		
	S 994	QSW0825-001Z	TACT SWITCH		
	S 995	QSW0825-001Z	TACT SWITCH		
	S 996	QSW0825-001Z	TACT SWITCH		
	S 997	QSW0825-001Z	TACT SWITCH		
	SP801	VYH7653-001	IC HOLDER		
	SP814	E3400-431	SPACER		
	SP823	VYSH101-009	SPACER		
	X 801	QAX0283-001Z	RESONATOR		
	X 802	QAX0401-001	CRYSTAL		

■ **Electrical parts list (VCD board)** **Block No. 03**

⚠	Item	Parts number	Parts name	Remarks	Area
	C 100	QETN0JM-108Z	E CAPACITOR	1000MF 20% 6.3V	
	C 101	EETC1HM-225ZJC	E CAPACITOR		
	C 102	QETN1HM-476Z	E CAPACITOR	47MF 20% 50V	
	C 130	QETN1AM-107Z	E CAPACITOR	100MF 20% 10V	
	C 131	EETC1HM-225ZJC	E CAPACITOR		
	C 133	FQDYB1CM-103Y	C CAPACITOR		
	C 134	FQDXBICM-122Y	C CAPACITOR		
	CN100	QGF1016F1-19	CONNECTOR		
	CN101	QGF1016F1-05	CONNECTOR		
	CN102	QGD2503F1-05	SOCKET		
	C1503	QETC0JM-477Z	E CAPACITOR	470MF 20% 6.3V	
	C1504	QCS11HJ-470	C CAPACITOR	47PF 5% 50V	
	C1505	QCZ0205-155Z	ML C CAPACITOR	1.5MF	
	D 100	MTZJ3.9B-T2	Z DIODE		
	D 101	11EQS03LN-T2	SB DIODE		
	D 102	1N4003S-T5	SI DIODE		
	D1501	MTZJ6.8C-T2	Z DIODE		
	D1502	MTZJ6.8C-T2	Z DIODE		
	FW103	QUM153-14Z4Z4	FLAT WIRE		
	IC100	PQ1CG21H2FZ	IC		
	JA302	QNN0017-002	PIN JACK		
	L 101	QQL31AK-151Z	INDUCTOR		
	PP100	RT-01T-1.3B	PIN SOCKET		
	O 100	KRA102M-T	TRANSISTOR		
	O 130	KTA1271/OY/-T	TRANSISTOR		
	O 131	KRA102M-T	TRANSISTOR		
	R 100	QRE141J-561Y	C RESISTOR	560 5% 1/4W	
	R 101	QRE141J-122Y	C RESISTOR	1.2K 5% 1/4W	
	R 102	QRE141J-122Y	C RESISTOR	1.2K 5% 1/4W	
	R 103	QRE141J-102Y	C RESISTOR	1.0K 5% 1/4W	
	R 104	QRE141J-751Y	C RESISTOR	750 5% 1/4W	
	R 105	QRE141J-102Y	C RESISTOR	1.0K 5% 1/4W	
⚠	R 124	QRJ146J-4R7X	UNF C.RESISTOR	4.7 5% 1/4W	
⚠	R 125	QRJ146J-4R7X	UNF C.RESISTOR	4.7 5% 1/4W	
	R 130	QRE141J-103Y	C RESISTOR	10K 5% 1/4W	
	R 131	QRE141J-102Y	C RESISTOR	1.0K 5% 1/4W	
	R 132	QRE141J-102Y	C RESISTOR	1.0K 5% 1/4W	
	R 133	QRE141J-181Y	C RESISTOR	180 5% 1/4W	
	R 134	QRE141J-181Y	C RESISTOR	180 5% 1/4W	
	R1502	QRE141J-104Y	C RESISTOR	100K 5% 1/4W	
	SP133	E3400-431	SPACER		
	SP150	E3400-431	SPACER		

■ Electrical parts list (Tuner board)

Block No. 04

⚠	Item	Parts number	Parts name	Remarks	Area
	C 1	NCB21HK-223X	C CAPACITOR		
	C 2	NCB21HK-103X	C CAPACITOR		
	C 3	EETC1CM-106ZJC	E CAPACITOR		
	C 4	NCB21HK-103X	C CAPACITOR		
	C 6	NCB21HK-102X	C CAPACITOR		
	C 7	NCB21HK-102X	C CAPACITOR		
	C 8	NCB21HK-102X	C CAPACITOR		
	C 10	NRSA02J-0R0X	MG RESISTOR		
	C 11	NCB21HK-104X	C CAPACITOR		
	C 12	NCB21HK-473X	C CAPACITOR		
	C 13	NDC21HJ-120X	C CAPACITOR		
	C 14	EETC1AM-107ZJC	E CAPACITOR		
	C 15	NDC21HJ-120X	C CAPACITOR		
	C 16	NDC21HJ-120X	C CAPACITOR		
	C 17	NCB21HK-392X	C CAPACITOR		
	C 18	QENC1HM-474Z	NP E.CAPACITOR	.47MF 20% 50V	
	C 19	NCB21HK-473X	C CAPACITOR		
	C 20	NCB21HK-102X	C CAPACITOR		
	C 21	NCB21HK-223X	C CAPACITOR		
	C 22	NCS21HJ-151X	C CAPACITOR		
	C 23	NCS21HJ-151X	C CAPACITOR		
	C 24	NCS21HJ-151X	C CAPACITOR		
	C 25	EETC1AM-107ZJC	E CAPACITOR		
	C 26	NCB21HK-102X	C CAPACITOR		
	C 27	NCB21HK-102X	C CAPACITOR		
	C 30	EETC1CM-107ZJC	E CAPACITOR		
	C 31	QEKC1CM-226Z	E CAPACITOR	22MF 20% 16V	
	C 32	NCB21HK-473X	C CAPACITOR		
	C 33	NCB21HK-473X	C CAPACITOR		
	C 34	NCB21HK-223X	C CAPACITOR		
	C 35	NCB21HK-473X	C CAPACITOR		
	C 36	EETC1HM-105ZJC	E CAPACITOR		
	C 37	EETC1HM-105ZJC	E CAPACITOR		
	C 38	EETC1HM-224ZJC	E CAPACITOR		
	C 39	EETC1HM-105ZJC	E CAPACITOR		
	C 40	QETN1CM-106Z	E CAPACITOR	10MF 20% 16V	
	C 41	QETN1CM-106Z	E CAPACITOR	10MF 20% 16V	
	C 42	NCB21HK-152X	C CAPACITOR		
	C 43	NCB21HK-152X	C CAPACITOR		
	C 44	QETN1CM-106Z	E CAPACITOR	10MF 20% 16V	
	C 45	QETN1CM-106Z	E CAPACITOR	10MF 20% 16V	
	C 46	NCB21HK-273X	C CAPACITOR		
	C 47	EETC1HM-105ZJC	E CAPACITOR		
	C 48	NCB21HK-222X	C CAPACITOR		
	C 49	NCS21HJ-471X	C CAPACITOR		
	C 50	QEKC1CM-226Z	E CAPACITOR	22MF 20% 16V	
	C 51	QEKC1HM-105Z	E CAPACITOR	1.0MF 20% 50V	
	C 52	QFVJ1HJ-274Z	CAPACITOR	.27MF 5% 50V	
	C 53	EETC1CM-226ZJC	E CAPACITOR		
	C 54	NCB21HK-473X	C CAPACITOR		
	C 57	NCB21HK-102X	C CAPACITOR		
	C 58	NCB21HK-473X	C CAPACITOR		
	C 59	NCB21HK-102X	C CAPACITOR		
	CF 1	VCF2L3B-105Z	CERAMIC FILTER		
	CF 2	VCF2L3B-105Z	CERAMIC FILTER		
	CF 3	QAX0610-001Z	C DISCRIMINATOR		
	CN 1	QGF1205F1-09	CONNECTOR		
	D 1	1SS133-T2	SI DIODE		
	D 2	1SS133-T2	SI DIODE		
	D 3	1SS133-T2	SI DIODE		
	D 4	1SS133-T2	SI DIODE		
	D 11	1SS133-T2	SI DIODE		
	IC 1	LA1838	IC		

⚠	Item	Parts number	Parts name	Remarks	Area
	IC 2	LC72136N	IC		
	J 1	QNB0014-001	ANT TERMINAL		
	L 1	QQR0796-001	COIL BLOCK		
	O 1	2SC2814/4-5/-X	TRANSISTOR		
	O 5	DTA114YKA-X	TRANSISTOR		
	R 1	QRE141J-560Y	C RESISTOR	56 5% 1/4W	
	R 2	NRSA02J-331X	MG RESISTOR		
	R 3	NRSA02J-224X	MG RESISTOR		
	R 4	NRSA02J-331X	MG RESISTOR		
	R 5	NRSA02J-560X	MG RESISTOR		
	R 6	NRSA02J-240X	MG RESISTOR		
	R 10	NRSA02J-222X	MG RESISTOR		
	R 13	NRSA02J-103X	MG RESISTOR		
	R 14	NRSA02J-104X	MG RESISTOR		
	R 15	NRSA02J-332X	MG RESISTOR		
	R 16	NRSA02J-472X	MG RESISTOR		
⚠	R 17	QRZ9005-680X	F RESISTOR	68 1/0W	
	R 18	NRSA02J-102X	MG RESISTOR		
	R 19	NRSA02J-102X	MG RESISTOR		
	R 20	NRSA02J-102X	MG RESISTOR		
	R 21	NRSA02J-562X	MG RESISTOR		
	R 22	NRSA02J-472X	MG RESISTOR		
	R 23	NRSA02J-182X	MG RESISTOR		
	R 24	NRSA02J-103X	MG RESISTOR		
	R 25	NRSA02J-331X	MG RESISTOR		
	R 26	NRSA02J-222X	MG RESISTOR		
	R 27	NRSA02J-103X	MG RESISTOR		
	R 28	NRSA02J-103X	MG RESISTOR		
	R 29	NRSA02J-103X	MG RESISTOR		
	R 30	NRSA02J-122X	MG RESISTOR		
	R 31	NRSA02J-102X	MG RESISTOR		
	R 32	NRSA02J-102X	MG RESISTOR		
	R 33	NRSA02J-331X	MG RESISTOR		
	R 34	NRSA02J-470X	MG RESISTOR		
	R 35	NRSA02J-562X	MG RESISTOR		
	R 36	NRSA02J-332X	MG RESISTOR		
	R 37	NRSA02J-103X	MG RESISTOR		
	R 38	NRSA02J-563X	MG RESISTOR		
	R 39	NRSA02J-563X	MG RESISTOR		
	R 40	NRSA02J-243X	MG RESISTOR		
	R 41	NRSA02J-332X	MG RESISTOR		
	R 60	NRSA02J-0R0X	MG RESISTOR		
	T 1	QQR0793-001	IFT		
	TU 1	QAU0161-001	FRONT END		
	X 1	QAX0402-001	CRYSTAL		

■ Electrical parts list (VIDEO CD board)

Block No. 05

⚠	Item	Parts number	Parts name	Remarks	Area
	C 101	NCB31CK-104X	C CAPACITOR		
	C 102	NCB31CK-104X	C CAPACITOR		
	C 103	NCB31CK-104X	C CAPACITOR		
	C 104	NCB31CK-104X	C CAPACITOR		
	C 105	NCB31CK-104X	C CAPACITOR		
	C 106	NCB31CK-104X	C CAPACITOR		
	C 107	NCB31CK-104X	C CAPACITOR		
	C 108	NCB31CK-104X	C CAPACITOR		
	C 109	NCB31CK-104X	C CAPACITOR		
	C 110	NCB31CK-104X	C CAPACITOR		
	C 111	NCB31CK-104X	C CAPACITOR		
	C 112	NCB31CK-104X	C CAPACITOR		
	C 113	NCB31CK-104X	C CAPACITOR		
	C 114	NCB31CK-104X	C CAPACITOR		
	C 115	NCB31CK-104X	C CAPACITOR		
	C 116	NCB31CK-104X	C CAPACITOR		
	C 117	NCB31CK-104X	C CAPACITOR		
	C 118	NCB31CK-104X	C CAPACITOR		
	C 119	NCB31CK-104X	C CAPACITOR		
	C 120	NCB31CK-104X	C CAPACITOR		
	C 121	NCB31CK-104X	C CAPACITOR		
	C 122	NCB31CK-104X	C CAPACITOR		
	C 123	NCB31CK-104X	C CAPACITOR		
	C 124	NCB31CK-104X	C CAPACITOR		
	C 125	NCB31CK-104X	C CAPACITOR		
	C 126	NCB31CK-104X	C CAPACITOR		
	C 127	NCB31CK-104X	C CAPACITOR		
	C 128	NCB31CK-104X	C CAPACITOR		
	C 129	NEA70JM-226X	E CAPACITOR		
	C 131	NCS31HJ-150X	C CAPACITOR		
	C 132	NCS31HJ-150X	C CAPACITOR		
	C 133	NCF31EZ-104X	C CAPACITOR		
	C 134	NCF31EZ-104X	C CAPACITOR		
	C 135	NCF31EZ-104X	C CAPACITOR		
	C 136	NCF31EZ-104X	C CAPACITOR		
	C 137	NCF31EZ-104X	C CAPACITOR		
	C 138	NCF31EZ-104X	C CAPACITOR		
	C 139	NCB31CK-104X	C CAPACITOR		
	C 140	NEA70JM-226X	E CAPACITOR		
	C 141	NCB31CK-104X	C CAPACITOR		
	C 142	NCF31EZ-104X	C CAPACITOR		
	C 143	NCB31CK-104X	C CAPACITOR		
	C 146	NCF31EZ-104X	C CAPACITOR		
	C 148	NCS31HJ-220X	C CAPACITOR		
	C 151	NCF31EZ-104X	C CAPACITOR		
	C 152	NCB31HK-472X	C CAPACITOR		
	C 157	NCB31HK-103X	C CAPACITOR		
	C 158	NCF31EZ-104X	C CAPACITOR		
	C 159	NCB31CK-104X	C CAPACITOR		
	C 160	NEA70JM-107X	E CAPACITOR		
	C 161	NCF31EZ-104X	C CAPACITOR		
	C 162	NCS31HJ-271X	C CAPACITOR		
	C 163	NCS31HJ-271X	C CAPACITOR		
	C 164	NCS31HJ-271X	C CAPACITOR		
	C 165	NCS31HJ-101X	C CAPACITOR		
	C 166	NCS31HJ-101X	C CAPACITOR		
	C 167	NCS31HJ-101X	C CAPACITOR		
	C 168	NCS31HJ-331X	C CAPACITOR		
	C 169	NCS31HJ-331X	C CAPACITOR		
	C 170	NCS31HJ-331X	C CAPACITOR		
	C 171	NCS31HJ-151X	C CAPACITOR		
	C 172	NCS31HJ-151X	C CAPACITOR		
	C 173	NCS31HJ-151X	C CAPACITOR		

⚠	Item	Parts number	Parts name	Remarks	Area
	C 181	NCF31EZ-104X	C CAPACITOR		
	C 182	NCB31CK-104X	C CAPACITOR		
	C 183	NEA70JM-107X	E CAPACITOR		
	C 184	NCB31CK-104X	C CAPACITOR		
	C 185	NEA70JM-107X	E CAPACITOR		
	C 186	NCB31CK-104X	C CAPACITOR		
	C 187	NEA70JM-107X	E CAPACITOR		
	C 194	NCS31HJ-391X	C CAPACITOR		
	CN101	QGF1027F1-19X	CONNECTOR		
	CN102	QGF1027F1-23X	CONNECTOR		
	D 151	UDZ4.7B-X	ZENER DIODE		
	D 161	UDZ4.7B-X	ZENER DIODE		
	D 162	UDZ4.7B-X	ZENER DIODE		
	D 163	UDZ4.7B-X	ZENER DIODE		
	IC101	CL8830-PA1	IC		
	IC102	NAX0265-001X	IC		
	IC103	MN102L490A	MICOM		
	IC104	KM416S1120DT-G8	IC		
	IC105	LH5S4RYP-X	IC		
	IC106	TC74VHC00FT-X	IC		
	IC107	TC74VHC74FT-X	IC		
	IC151	UPD6461GS-635-X	IC		
	IC152	BU1427K	IC		
	IC181	HD74HCT244FP-XE	IC		
	K 101	NQR0227-004X	FERRITE BEADS		
	K 181	NQR0227-004X	FERRITE BEADS		
	K 182	NQR0227-004X	FERRITE BEADS		
	K 183	NQR0227-004X	FERRITE BEADS		
	K 184	NQR0227-004X	FERRITE BEADS		
	L 161	NQL012K-2R7X	INDUCTOR		
	L 162	NQL012K-2R7X	INDUCTOR		
	L 163	NQL012K-2R7X	INDUCTOR		
	L 164	NQL012K-1R8X	INDUCTOR		
	L 165	NQL012K-1R8X	INDUCTOR		
	L 166	NQL012K-1R8X	INDUCTOR		
	R 101	NRSA63J-472X	MG RESISTOR		
	R 102	NRSA63J-332X	MG RESISTOR		
	R 104	NRSA63J-102X	MG RESISTOR		
	R 105	NRSA63J-151X	MG RESISTOR		
	R 106	NRSA63J-105X	MG RESISTOR		
	R 107	NRSA63J-222X	MG RESISTOR		
	R 108	NRSA63J-103X	MG RESISTOR		
	R 109	NRSA63J-102X	MG RESISTOR		
	R 110	NRSA63J-473X	MG RESISTOR		
	R 111	NRSA63J-473X	MG RESISTOR		
	R 121	NRSA63J-0R0X	MG RESISTOR		
	R 151	NRSA63J-562X	MG RESISTOR		
	R 152	NRSA63J-750X	MG RESISTOR		
	R 155	NRSA63J-820X	MG RESISTOR		
	R 157	NRSA63J-0R0X	MG RESISTOR		
	R 159	NRSA63J-0R0X	MG RESISTOR		
	R 160	NRSA63J-112X	MG RESISTOR		
	R 161	NRSA63J-0R0X	MG RESISTOR		
	R 163	NRSA63J-0R0X	MG RESISTOR		
	R 164	NRSA63J-750X	MG RESISTOR		
	R 165	NRSA63J-750X	MG RESISTOR		
	R 166	NRSA63J-750X	MG RESISTOR		
	R 171	NRSA63J-271X	MG RESISTOR		
	R 172	NRSA63J-271X	MG RESISTOR		
	R 173	NRSA63J-271X	MG RESISTOR		
	R 174	NRSA63J-271X	MG RESISTOR		
	R 175	NRSA63J-390X	MG RESISTOR		
	R 181	NRSA63J-750X	MG RESISTOR		

■ **Electrical parts list (VIDEO CD board)** **Block No. 05**

⚠	Item	Parts number	Parts name	Remarks	Area
	R 182	NRSA63J-271X	MG RESISTOR		
	R 183	NRSA63J-102X	MG RESISTOR		
	R 184	NRSA63J-0R0X	MG RESISTOR		
	R 185	NRSA63J-0R0X	MG RESISTOR		
	R 186	NRSA63J-0R0X	MG RESISTOR		
	R 187	NRSA63J-471X	MG RESISTOR		
	R 188	NRSA63J-471X	MG RESISTOR		
	R 189	NRSA63J-471X	MG RESISTOR		
	R 190	NRSA63J-0R0X	MG RESISTOR		
	R 191	NRSA63J-471X	MG RESISTOR		
	R 192	NRSA63J-0R0X	MG RESISTOR		
	R 193	NRSA63J-472X	MG RESISTOR		
	R 194	NRSA63J-103X	MG RESISTOR		
	X 101	NAX0150-001X	CRYSTAL		

■ **Electrical parts list (CD servo control board)** **Block No. 06**

⚠	Item	Parts number	Parts name	Remarks	Area
	C 253	NCB21EK-104X	C CAPACITOR		
	C 254	QERF1AM-476Z	E CAPACITOR	47MF 20% 10V	
	C 291	QERF1AM-476Z	E CAPACITOR	47MF 20% 10V	
	C 601	NCB21HK-102X	C CAPACITOR		
	C 602	NCB21HK-102X	C CAPACITOR		
	C 603	NCB21HK-223X	C CAPACITOR		
	C 604	NCB21HK-223X	C CAPACITOR		
	C 605	NCS21HJ-271X	C CAPACITOR		
	C 606	NCS21HJ-221X	C CAPACITOR		
	C 607	NCB21HK-222X	C CAPACITOR		
	C 608	NCB21HK-223X	C CAPACITOR		
	C 610	NCB21EK-563X	C CAPACITOR		
	C 611	NCB21EK-104X	C CAPACITOR		
	C 612	QER41HM-105	E CAPACITOR	1.0MF 20% 50V	
	C 613	NCS21HJ-101X	C CAPACITOR		
	C 614	NCB21HK-273X	C CAPACITOR		
	C 615	NCB21HK-472X	C CAPACITOR		
	C 616	NCB21HK-103X	C CAPACITOR		
	C 619	NCS21HJ-150X	C CAPACITOR		
	C 620	NCS21HJ-470X	C CAPACITOR		
	C 621	NCB21EK-104X	C CAPACITOR		
	C 623	NCF21CZ-105X	C CAPACITOR		
	C 624	QERF0JM-107Z	E CAPACITOR	100MF 20% 6.3V	
	C 631	QER41CM-106	E CAPACITOR	10MF 20% 16V	
	C 632	NCF21CZ-105X	C CAPACITOR		
	C 633	NCB21HK-223X	C CAPACITOR		
	C 651	NCS21HJ-120X	C CAPACITOR		
	C 652	NCS21HJ-120X	C CAPACITOR		
	C 653	NCB21EK-104X	C CAPACITOR		
	C 655	NCB21EK-104X	C CAPACITOR		
	C 656	NCB21EK-104X	C CAPACITOR		
	C 657	QER41AM-227	E CAPACITOR	220MF 20% 10V	
	C 658	NCB21EK-104X	C CAPACITOR		
	C 661	NCS21HJ-471X	C CAPACITOR		
	C 663	NCB21HK-223X	C CAPACITOR		
	C 664	NCB21HK-223X	C CAPACITOR		
	C 665	NCB21CK-154X	C CAPACITOR		
	C 667	NCB21CK-474X	C CAPACITOR		
	C 669	QER41AM-227	E CAPACITOR	220MF 20% 10V	
	C 673	QER41AM-227	E CAPACITOR	220MF 20% 10V	
	C 676	NCB21EK-104X	C CAPACITOR		
	C 677	NCB21EK-104X	C CAPACITOR		
	C 679	QERF0JM-107Z	E CAPACITOR	100MF 20% 6.3V	
	C 680	NCB21EK-104X	C CAPACITOR		
	C 691	NCS21HJ-391X	C CAPACITOR		
	C 692	NCS21HJ-391X	C CAPACITOR		
	C 693	NCB21HK-682X	C CAPACITOR		
	C 694	NCB21HK-682X	C CAPACITOR		
	C 695	NCB21HK-473X	C CAPACITOR		
	C 696	QER41CM-106	E CAPACITOR	10MF 20% 16V	
	C 699	QER41AM-227	E CAPACITOR	220MF 20% 10V	
	C 801	NCB21HK-153X	C CAPACITOR		
	C 802	NCB21HK-472X	C CAPACITOR		
	C 811	NCS21HJ-391X	C CAPACITOR		
	C 812	NCS21HJ-391X	C CAPACITOR		
	C 813	NCS21HJ-391X	C CAPACITOR		
	C 814	NCS21HJ-391X	C CAPACITOR		
	C 815	QEQF1HM-105Z	NP E CAPACITOR	1.0MF 20% 50V	
	C 816	QEQF1HM-225Z	E CAPACITOR	2.2MF 20% 50V	
	C 821	NCF21CZ-105X	C CAPACITOR		
	C 822	QER41AM-227	E CAPACITOR	220MF 20% 10V	
	C 852	QER41CM-106	E CAPACITOR	10MF 20% 16V	
	C 855	NCB21EK-104X	C CAPACITOR		

⚠	Item	Parts number	Parts name	Remarks	Area
	C 859	NCF21CZ-105X	C CAPACITOR		
	C 860	NCF21CZ-105X	C CAPACITOR		
	CN151	EMV7171-123R	CONNECTOR		
	CN601	QGF1016F1-15	15FFC CONNECTOR		
	CN651	QGF1016F1-19	CONNECTOR		
	CN652	QGF1016F1-05	CONNECTOR		
	CN801	QGA2001C1-06	6P PLUG ASSY		
	CN854	QGB2016K1-07	CONNECTOR		
	CN855	QGG2002M4-10	CONNECTOR		
	D 801	DSK10C-T1	DIODE		
	IC251	HD6433657A29H	IC		
	IC601	AN8806SB-W	IC		
	IC651	MN35511	IC		
	IC652	NJM4580E-W	IC		
	IC801	LA6541-X	IC		
	IC851	TA8409S	IC		
	IC852	TA8409S	IC		
	L 851	QQL01BK-100Z	INDUCTOR		
	L 853	QQL01BK-100Z	INDUCTOR		
	L 854	QQL01BK-100Z	INDUCTOR		
	O 291	2SB1357/EF/-T	TRANSISTOR		
	O 631	2SA1037AK/RS/-X	TRANSISTOR		
	O 632	DTC124EKA-X	TRANSISTOR		
	R 253	NRSA02J-102X	MG RESISTOR		
	R 254	NRSA02J-102X	MG RESISTOR		
	R 255	NRSA02J-102X	MG RESISTOR		
	R 256	NRSA02J-102X	MG RESISTOR		
	R 257	NRSA02J-102X	MG RESISTOR		
	R 258	NRSA02J-102X	MG RESISTOR		
	R 259	NRSA02J-105X	MG RESISTOR		
	R 260	NRSA02J-102X	MG RESISTOR		
	R 261	NRSA02J-102X	MG RESISTOR		
	R 262	NRSA02J-223X	MG RESISTOR		
	R 263	NRSA02J-223X	MG RESISTOR		
	R 264	NRSA02J-223X	MG RESISTOR		
	R 265	NRSA02J-223X	MG RESISTOR		
	R 274	NRSA02J-102X	MG RESISTOR		
	R 275	NRSA02J-102X	MG RESISTOR		
	R 276	NRSA02J-102X	MG RESISTOR		
	R 277	NRSA02J-102X	MG RESISTOR		
	R 278	NRSA02J-102X	MG RESISTOR		
	R 282	NRSA02J-102X	MG RESISTOR		
	R 284	NRSA02J-102X	MG RESISTOR		
	R 288	NRSA02J-102X	MG RESISTOR		
	R 289	NRSA02J-102X	MG RESISTOR		
	R 290	NRSA02J-102X	MG RESISTOR		
	R 291	NRSA02J-122X	MG RESISTOR		
	R 292	NRSA02J-103X	MG RESISTOR		
	R 293	NRSA02J-102X	MG RESISTOR		
	R 294	NRSA02J-102X	MG RESISTOR		
	R 601	NRSA02J-164X	MG RESISTOR		
	R 602	NRSA02J-913X	MG RESISTOR		
	R 603	NRSA02J-273X	MG RESISTOR		
	R 604	NRSA02J-913X	MG RESISTOR		
	R 605	NRSA02J-154X	MG RESISTOR		
	R 606	NRSA02J-394X	MG RESISTOR		
	R 611	NRSA02J-562X	MG RESISTOR		
	R 612	NRSA02J-125X	MG RESISTOR		
	R 613	NRSA02J-562X	MG RESISTOR		
	R 614	NRSA02J-155X	MG RESISTOR		
	R 615	NRSA02J-222X	MG RESISTOR		
	R 616	NRSA02J-472X	MG RESISTOR		
	R 617	NRSA02J-752X	MG RESISTOR		

■ Electrical parts list (CD servo control board)

Block No. 06

⚠	Item	Parts number	Parts name	Remarks	Area
	R 631	NRSA02J-2R2X	MG RESISTOR		
	R 632	NRSA02J-100X	MG RESISTOR		
	R 634	NRSA02J-120X	MG RESISTOR		
	R 635	NRSA02J-121X	MG RESISTOR		
	R 636	NRSA02J-910X	MG RESISTOR		
	R 651	NRSA02J-102X	MG RESISTOR		
	R 652	NRSA02J-102X	MG RESISTOR		
	R 653	NRSA02J-102X	MG RESISTOR		
	R 654	NRSA02J-101X	MG RESISTOR		
	R 655	NRSA02J-102X	MG RESISTOR		
	R 656	NRSA02J-102X	MG RESISTOR		
	R 657	NRSA02J-102X	MG RESISTOR		
	R 658	NRSA02J-102X	MG RESISTOR		
	R 659	NRSA02J-102X	MG RESISTOR		
	R 660	NRSA02J-102X	MG RESISTOR		
	R 661	NRSA02J-102X	MG RESISTOR		
	R 662	NRSA02J-683X	MG RESISTOR		
	R 663	NRSA02J-124X	MG RESISTOR		
	R 664	NRSA02J-331X	MG RESISTOR		
	R 665	NRSA02J-271X	MG RESISTOR		
	R 666	NRSA02J-221X	MG RESISTOR		
	R 667	NRSA02J-4R7X	MG RESISTOR		
	R 669	NRSA02J-562X	MG RESISTOR		
	R 670	NRSA02J-101X	MG RESISTOR		
	R 671	NRSA02J-101X	MG RESISTOR		
	R 672	NRSA02J-101X	MG RESISTOR		
	R 673	NRSA02J-101X	MG RESISTOR		
	R 674	NRSA02J-101X	MG RESISTOR		
	R 675	NRSA02J-101X	MG RESISTOR		
	R 676	NRSA02J-101X	MG RESISTOR		
	R 677	NRSA02J-102X	MG RESISTOR		
	R 678	NRSA02J-102X	MG RESISTOR		
	R 679	NRSA02J-680X	MG RESISTOR		
	R 682	NRSA02J-102X	MG RESISTOR		
	R 683	NRSA02J-105X	MG RESISTOR		
	R 685	NRSA02J-683X	MG RESISTOR		
	R 686	NRSA02J-102X	MG RESISTOR		
	R 687	NRSA02J-102X	MG RESISTOR		
	R 688	NRSA02J-102X	MG RESISTOR		
	R 691	NRSA02J-183X	MG RESISTOR		
	R 692	NRSA02J-183X	MG RESISTOR		
	R 693	NRSA02J-183X	MG RESISTOR		
	R 694	NRSA02J-183X	MG RESISTOR		
	R 695	NRSA02J-243X	MG RESISTOR		
	R 696	NRSA02J-243X	MG RESISTOR		
	R 697	NRSA02J-243X	MG RESISTOR		
	R 698	NRSA02J-243X	MG RESISTOR		
	R 701	NRSA02J-821X	MG RESISTOR		
	R 702	NRSA02J-821X	MG RESISTOR		
	R 703	NRSA02J-103X	MG RESISTOR		
	R 704	NRSA02J-103X	MG RESISTOR		
	R 705	NRSA02J-562X	MG RESISTOR		
	R 706	NRSA02J-202X	MG RESISTOR		
	R 707	NRSA02J-682X	MG RESISTOR		
	R 708	NRSA02J-101X	MG RESISTOR		
	R 709	NRSA02J-101X	MG RESISTOR		
	R 710	NRSA02J-221X	MG RESISTOR		
	R 801	NRSA02J-272X	MG RESISTOR		
	R 802	NRSA02J-392X	MG RESISTOR		
	R 803	NRSA02J-912X	MG RESISTOR		
	R 804	NRSA02J-224X	MG RESISTOR		
	R 805	NRSA02J-133X	MG RESISTOR		
	R 806	NRSA02J-243X	MG RESISTOR		
	R 807	NRSA02J-122X	MG RESISTOR		
	R 808	NRSA02J-273X	MG RESISTOR		
	R 809	NRSA02J-122X	MG RESISTOR		
	R 811	NRSA02J-473X	MG RESISTOR		
	R 812	NRSA02J-332X	MG RESISTOR		
	R 813	NRSA02J-152X	MG RESISTOR		
	R 831	NRSA02J-151X	MG RESISTOR		
	R 832	NRSA02J-103X	MG RESISTOR		
	R 842	NRSA02J-472X	MG RESISTOR		
	R 851	NRSA02J-102X	MG RESISTOR		
	R 852	NRSA02J-102X	MG RESISTOR		
	R 853	NRSA02J-102X	MG RESISTOR		
	R 854	NRSA02J-102X	MG RESISTOR		
	R 855	NRSA02J-102X	MG RESISTOR		
	R 856	NRSA02J-102X	MG RESISTOR		
	R 857	NRSA02J-272X	MG RESISTOR		
	R 859	NRSA02J-181X	MG RESISTOR		
	R 861	NRSA02J-102X	MG RESISTOR		
	R 862	NRSA02J-102X	MG RESISTOR		
	R 863	NRSA02J-102X	MG RESISTOR		
	R 864	NRSA02J-102X	MG RESISTOR		
	R 865	NRSA02J-102X	MG RESISTOR		
	R 866	NRSA02J-102X	MG RESISTOR		
	R 871	NRSA02J-223X	MG RESISTOR		
	R 872	NRSA02J-223X	MG RESISTOR		
	R 873	NRSA02J-223X	MG RESISTOR		
	R 874	NRSA02J-223X	MG RESISTOR		
	R 875	NRSA02J-223X	MG RESISTOR		
	R 876	NRSA02J-223X	MG RESISTOR		
	R 880	NRSA02J-102X	MG RESISTOR		
	R 881	NRSA02J-102X	MG RESISTOR		
	R 882	NRSA02J-102X	MG RESISTOR		
	R 883	NRSA02J-102X	MG RESISTOR		
	R 884	NRSA02J-102X	MG RESISTOR		
	R 885	NRSA02J-102X	MG RESISTOR		
	R 886	NRSA02J-102X	MG RESISTOR		
	R 887	NRSA02J-102X	MG RESISTOR		
	R 888	NRSA02J-223X	MG RESISTOR		
	R 889	NRSA02J-223X	MG RESISTOR		
	R 890	NRSA02J-223X	MG RESISTOR		
	R 891	NRSA02J-223X	MG RESISTOR		
	R 892	NRSA02J-223X	MG RESISTOR		
	R 893	NRSA02J-223X	MG RESISTOR		
	R 894	NRSA02J-223X	MG RESISTOR		
	R 895	NRSA02J-223X	MG RESISTOR		
	W 601	QUB220-07HPDT	SIN TWIST WIRE		
	X 251	QAX0246-001Z	RESONATOR		
	X 651	QAX0413-001Z	CRYSTAL		

■ Electrical parts list (CD select switch board)

Block No. 07

⚠	Item	Parts number	Parts name	Remarks	Area
	CN804	QGB2016J1-07	CONNECTOR		
	SW 1	QSW0859-001	LEVER SWITCH		
	SW 2	QSW0859-001	LEVER SWITCH		
	SW 3	QSW0859-001	LEVER SWITCH		
	SW 4	QSW0859-001	LEVER SWITCH		
	SW 5	QSW0859-001	LEVER SWITCH		
	SW 6	QSW0859-001	LEVER SWITCH		

■ Electrical parts list (Head amplifier board)

Block No. 08

⚠	Item	Parts number	Parts name	Remarks	Area
	C 101	NCS21HJ-561X	C CAPACITOR		
	C 102	NCS21HJ-331X	C CAPACITOR		
	C 103	NCS21HJ-561X	C CAPACITOR		
	C 104	NCS21HJ-221X	C CAPACITOR		
	C 105	QEK40JM-227	E CAPACITOR	220MF 20% 6.3V	
	C 106	NCB21HK-333X	C CAPACITOR		
	C 107	QEK41EM-475	E CAPACITOR	4.7MF 20% 25V	
	C 108	NCB21HK-393X	C CAPACITOR		
	C 110	NCS21HJ-221X	C CAPACITOR		
	C 111	QEK41HM-104	E CAPACITOR	.10MF 20% 50V	
	C 112	QEK41CM-106	E CAPACITOR	10MF 20% 16V	
	C 113	NCB21HK-332X	C CAPACITOR		
	C 114	QEK41EM-475	E CAPACITOR	4.7MF 20% 25V	
	C 115	NCB21HK-153X	C CAPACITOR		
	C 116	NCB21HK-822X	C CAPACITOR		
	C 117	NCB21HK-223X	C CAPACITOR		
	C 119	NCB21HK-563X	C CAPACITOR		
	C 120	NCS21HJ-330X	C CAPACITOR		
	C 201	NCS21HJ-561X	C CAPACITOR		
	C 202	NCS21HJ-331X	C CAPACITOR		
	C 203	NCS21HJ-561X	C CAPACITOR		
	C 204	NCS21HJ-221X	C CAPACITOR		
	C 205	QEK40JM-227	E CAPACITOR	220MF 20% 6.3V	
	C 206	NCB21HK-333X	C CAPACITOR		
	C 207	QEK41EM-475	E CAPACITOR	4.7MF 20% 25V	
	C 208	NCB21HK-393X	C CAPACITOR		
	C 210	NCS21HJ-221X	C CAPACITOR		
	C 211	QEK41HM-104	E CAPACITOR	.10MF 20% 50V	
	C 212	QEK41CM-106	E CAPACITOR	10MF 20% 16V	
	C 213	NCB21HK-332X	C CAPACITOR		
	C 214	QEK41EM-475	E CAPACITOR	4.7MF 20% 25V	
	C 215	NCB21HK-153X	C CAPACITOR		
	C 216	NCB21HK-822X	C CAPACITOR		
	C 217	NCB21HK-223X	C CAPACITOR		
	C 219	NCB21HK-563X	C CAPACITOR		
	C 220	NCS21HJ-330X	C CAPACITOR		
	C 301	QEK41CM-106	E CAPACITOR	10MF 20% 16V	
	C 302	QEK41CM-476	E CAPACITOR	47MF 20% 16V	
	C 303	QEK41CM-226	E CAPACITOR	22MF 20% 16V	
	C 304	QEK41EM-475	E CAPACITOR	4.7MF 20% 25V	
	C 305	NCB21HK-393X	C CAPACITOR		
	C 306	QEK40JM-227	E CAPACITOR	220MF 20% 6.3V	
	C 308	NCB21HK-562X	C CAPACITOR		
	C 309	NCB21HK-562X	C CAPACITOR		
	C 310	NCB21HK-223X	C CAPACITOR		
	C 311	NCB21HK-682X	C.CAPACITOR		
	C 313	QEKJ1AM-107Z	E CAPACITOR	100MF 20% 10V	
	C 314	QCZ0205-155Z	ML C CAPACITOR	1.5MF	
	C 315	QCZ0205-155Z	ML C CAPACITOR	1.5MF	
	C 316	QFG32AJ-103Z	PP CAPACITOR	.010MF 5% 100V	
	C 318	NCB21HK-103X	C CAPACITOR		
	C 319	QFG32AJ-821Z	TF CAPACITOR	820PF 5% 100V	
	C 321	NCB21HK-103X	C CAPACITOR		
	C 322	QFG32AJ-152Z	M CAPACITOR	1500PF 5% 100V	
	C 327	QEK41CM-476	E CAPACITOR	47MF 20% 16V	
	C 328	NCS21HJ-151X	C CAPACITOR		
	C 329	NCS21HJ-151X	C CAPACITOR		
	C 330	NCS21HJ-151X	C CAPACITOR		
	C 332	NCS21HJ-151X	C CAPACITOR		
	C 335	NCB21HK-103X	C CAPACITOR		
	C 336	NCB21HK-103X	C CAPACITOR		
	C 337	NCB21HK-103X	C CAPACITOR		
	C 338	NCB21HK-103X	C CAPACITOR		

⚠	Item	Parts number	Parts name	Remarks	Area
	C 339	QEK41CM-476	E CAPACITOR	47MF 20% 16V	
	C 340	NCB21HK-103X	C CAPACITOR		
	C 341	QEKJ1AM-107Z	E CAPACITOR	100MF 20% 10V	
	C 342	QEK41EM-475	E CAPACITOR	4.7MF 20% 25V	
	C 343	QET41CM-106	E CAPACITOR	10MF 20% 16V	
	C 344	NCB21HK-472X	C CAPACITOR		
	C 345	NCS21HJ-331X	C CAPACITOR		
	C 350	QFLM1HJ-102Z	M CAPACITOR	1000PF 5% 50V	
	CN301	QGF1205F1-06	CONNECTOR		
	CN302	QGF1205F1-06	CONNECTOR		
	CN303	QGB2011M1-10	B TO B CONNECTO		
	CN304	QGB2011M1-10	B TO B CONNECTO		
	CN305	QGF1205F1-10	CONNECTOR		
	CN306	QGF1205F1-11	CONNECTOR		
	D 307	HZM5.1NB2-X	CHIP Z DIODE CM		
	D 308	HZM5.1NB2-X	CHIP Z DIODE CM		
	D 309	MA704A-X	S.K.DIODE		
	IC301	BA3126N	IC		
	IC302	AN7345K	IC		
	IC303	BU4094BCF-X	IC		
	IC304	BU4094BCF-X	IC		
	L 202	QQR0779-001Z	INDUCTOR	EMC	
	L 301	QQR0620-001	OSC COIL(BIAS)		
	L 303	QQL01BK-100Z	INDUCTOR		
	O 102	DTC144TKA-X	TRANSISTOR		
	O 103	DTC144EKA-X	TRANSISTOR		
	O 105	2SC3576-JVC-T	TRANSISTOR		
	Q 202	DTC144TKA-X	TRANSISTOR		
	O 203	DTC144EKA-X	TRANSISTOR		
	O 205	2SC3576-JVC-T	TRANSISTOR		
	O 302	2SC2001/K/-T	TRANSISTOR		
	O 303	2SC2001/K/-T	TRANSISTOR		
	Q 304	2SC3576-JVC-T	TRANSISTOR		
	O 305	2SC3576-JVC-T	TRANSISTOR		
	O 306	2SC2412K/RS/-X	CHIP TRANSISTOR		
	O 307	2SC2412K/RS/-X	CHIP TRANSISTOR		
	O 308	2SC2412K/RS/-X	CHIP TRANSISTOR		
	O 309	2SC2412K/RS/-X	CHIP TRANSISTOR		
	O 312	2SB562/C/-T	TRANSISTOR		
	O 313	2SC2412K/RS/-X	CHIP TRANSISTOR		
	O 314	2SB562/C/-T	TRANSISTOR		
	Q 315	2SC2412K/RS/-X	CHIP TRANSISTOR		
	O 316	2SA952/LK/-T	TRANSISTOR		
	O 317	DTC124EKA-X	TRANSISTOR		
	O 321	DTC144EKA-X	TRANSISTOR		
	O 322	DTC144EKA-X	TRANSISTOR		
	Q 323	2SC2412K/RS/-X	CHIP TRANSISTOR		
	R 102	NRSA02J-102X	MG RESISTOR		
	R 103	NRSA02J-183X	MG RESISTOR		
	R 105	NRSA02J-220X	MG RESISTOR		
	R 106	NRSA02J-392X	MG RESISTOR		
	R 107	NRSA02J-123X	MG RESISTOR		
	R 108	NRSA02J-222X	MG RESISTOR		
	R 109	NRSA02J-152X	MG RESISTOR		
	R 111	NRSA02J-562X	MG RESISTOR		
	R 112	NRSA02J-122X	MG RESISTOR		
	R 113	NRSA02J-271X	MG RESISTOR		
	R 114	NRSA02J-391X	MG RESISTOR		
	R 115	NRSA02J-332X	MG RESISTOR		
	R 117	NRSA02J-332X	MG RESISTOR		
	R 118	NRSA02J-152X	MG RESISTOR		
	R 119	NRSA02J-203X	MG RESISTOR		
	R 120	NRSA02J-102X	MG RESISTOR		

■ Electrical parts list (Head amplifier board)

Block No. 08

⚠	Item	Parts number	Parts name	Remarks	Area
	R 121	NRSA02J-122X	MG RESISTOR		
	R 202	NRSA02J-102X	MG RESISTOR		
	R 203	NRSA02J-183X	MG RESISTOR		
	R 205	NRSA02J-220X	MG RESISTOR		
	R 206	NRSA02J-392X	MG RESISTOR		
	R 207	NRSA02J-123X	MG RESISTOR		
	R 208	NRSA02J-222X	MG RESISTOR		
	R 209	NRSA02J-152X	MG RESISTOR		
	R 211	NRSA02J-562X	MG RESISTOR		
	R 212	NRSA02J-122X	MG RESISTOR		
	R 213	NRSA02J-271X	MG RESISTOR		
	R 214	NRSA02J-391X	MG RESISTOR		
	R 215	NRSA02J-332X	MG RESISTOR		
	R 217	NRSA02J-332X	MG RESISTOR		
	R 218	NRSA02J-152X	MG RESISTOR		
	R 219	NRSA02J-203X	MG RESISTOR		
	R 220	NRSA02J-102X	MG RESISTOR		
	R 221	NRSA02J-122X	MG RESISTOR		
	R 301	NRS181J-221X	MG RESISTOR		
	R 302	NRS181J-101X	MG RESISTOR		
	R 304	NRSA02J-393X	MG RESISTOR		
	R 305	NRSA02J-103X	MG RESISTOR		
	R 306	NRSA02J-103X	MG RESISTOR		
	R 307	NRSA02J-103X	MG RESISTOR		
	R 308	NRSA02J-152X	MG RESISTOR		
	R 309	NRSA02J-152X	MG RESISTOR		
	R 310	NRS181J-820X	MG RESISTOR		
	R 311	NRS181J-820X	MG RESISTOR		
	R 313	NRSA02J-3R3X	MG RESISTOR		
	R 314	NRSA02J-223X	MG RESISTOR		
	R 315	NRSA02J-100X	MG RESISTOR		
	R 316	NRSA02J-223X	MG RESISTOR		
	R 317	NRSA02J-100X	MG RESISTOR		
	R 318	NRSA02J-123X	MG RESISTOR		
	R 319	NRSA02J-152X	MG RESISTOR		
	R 321	NRSA02J-123X	MG RESISTOR		
	R 322	NRSA02J-152X	MG RESISTOR		
	R 327	NRSA02J-474X	MG RESISTOR		
	R 328	NRSA02J-222X	MG RESISTOR		
	R 329	NRSA02J-222X	MG RESISTOR		
	R 330	NRSA02J-0R0X	MG RESISTOR		
	R 335	NRSA02J-222X	MG RESISTOR		
	R 336	NRSA02J-392X	MG RESISTOR		
	R 338	NRSA02J-222X	MG RESISTOR		
	R 339	NRSA02J-222X	MG RESISTOR		
	R 341	NRSA02J-222X	MG RESISTOR		
	R 343	NRSA02J-0R0X	MG RESISTOR		
	R 345	NRSA02J-222X	MG RESISTOR		
	R 346	NRSA02J-0R0X	MG RESISTOR		
	R 347	NRSA02J-392X	MG RESISTOR		
	R 348	NRSA02J-222X	MG RESISTOR		
	R 350	NRSA02J-472X	MG RESISTOR		
	R 351	NRSA02J-151X	MG RESISTOR		
	R 353	NRSA02J-472X	MG RESISTOR		
	R 354	NRSA02J-151X	MG RESISTOR		
	R 355	NRSA02J-332X	MG RESISTOR		
	R 357	NRSA02J-103X	MG RESISTOR		
	R 358	NRSA02J-222X	MG RESISTOR		
	R 359	NRSA02J-123X	MG RESISTOR		
	R 360	NRSA02J-433X	MG RESISTOR		
	R 361	NRSA02J-183X	MG RESISTOR		
	R 362	NRSA02J-123X	MG RESISTOR		
	R 363	NRSA02J-183X	MG RESISTOR		
	R 364	NRSA02J-433X	MG RESISTOR		
	R 365	NRSA02J-203X	MG RESISTOR		
	R 366	NRSA02J-123X	MG RESISTOR		
	R 367	NRSA02J-102X	MG RESISTOR		
	R 368	NRSA02J-391X	MG RESISTOR		
	R 369	NRSA02J-391X	MG RESISTOR		
	R 371	NRS181J-222X	MG RESISTOR		
	R 374	NRSA02J-912X	MG RESISTOR		
	R 375	NRSA02J-683X	MG RESISTOR		
	R 376	NRS181J-6R8X	MG RESISTOR		
	VR101	QVP0008-503Z	SEMI V RESISTOR		
	VR201	QVP0008-503Z	SEMI V RESISTOR		
	VR301	QVP0008-103Z	SEMI V RESISTOR		
	WIRE	EWR34D-10CS	FLAT WIRE		

■ Electrical parts list (Cassette switch board)

Block No. 09

⚠	Item	Parts number	Parts name	Remarks	Area
	CN 1	QGB2011L1-10	B TO B CONNECTO		
	D 1	1SR139-400-T2	SI DIODE		
	IC 1	SG-105F3-BB,C	PHOTO SENSER		
	P 1	QNZ0104-001	POST PIN		
	SW 2	QSW0832-001	LEAF SWITCH	TAPE	
	SW 4	QSW0832-001	LEAF SWITCH	70U	
	SW 6	QSW0507-001	SWITCH		

■ Electrical parts list (Cassette switch board)

Block No. 10

⚠	Item	Parts number	Parts name	Remarks	Area
	CN 1	QGB2011L1-10	B TO B CONNECTO		
	D 1	1SR139-400-T2	SI DIODE		
	IC 1	SG-105F3-BB,C	PHOTO SENSER		
	P 1	QNZ0104-001	POST PIN		
	SW 1	QSW0832-001	LEAF SWITCH	R.REC	
	SW 2	QSW0832-001	LEAF SWITCH	TAPE	
	SW 4	QSW0832-001	LEAF SWITCH	70U	
	SW 5	QSW0832-001	LEAF SWITCH	F.REC	
	SW 6	QSW0507-001	SWITCH		

Packing materials and accessories parts list

Block No. M 5 M M
Block No. M 6 M M

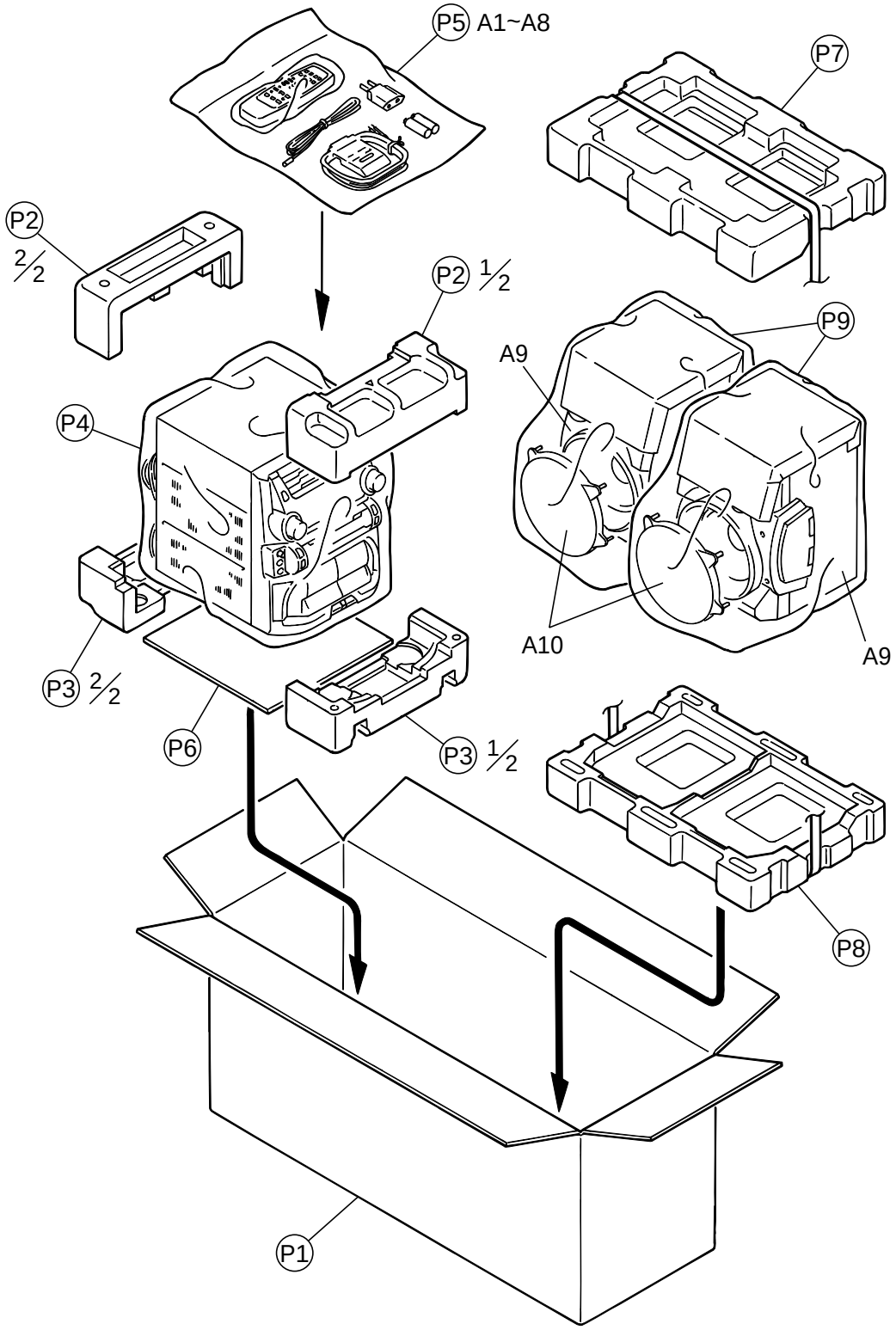

■ Parts list (Packing)

Block No. M5MM

⚠	Item	Parts number	Parts name	Q'ty	Description	Area
	P 1	GV20090-001A	PACKING CASE	1	MX-J570V	
		GV20090-002A	PACKING CASE	1	MX-J680V	
	P 2	GV10034-001A	CUSHION UPPER	1		
	P 3	GV10035-001A	CUSHION BOTTOM	1		
	P 4	QPC06507015P	POLY BAG	1		
	P 5	QPC02503515P	POLY BAG	1		
	P 6	GV40100-001A	CORRUGATED SPACER	1		
	P 7	139765161042	CUSHION UPPER	1	FOR SPEAKER	
	P 8	139765161043	CUSHION BOTTOM	1	FOR SPEAKER	
	P 9	138736001066	POLY BAG	2	FOR SPEAKER	

■ Parts list (Accessories)

Block No. M6MM

⚠	Item	Parts number	Parts name	Q'ty	Description	Area
	A 1	GVT0045-001A	INST.BOOK	1	ENG,CHI, ARA	US
		GVT0045-003A	INST BOOK	1	ENG,ARA	UX
	A 2	QAL0014-001	AM LOOP ANT	1		
	A 3	EWP503-001	ANT.WIRE	1		
	A 4	VMZ0139-001	CONNECT PLUG	1		UX
	A 5	QAM0112-001	AC PLUG ADAPTER	1		US
	A 6	QAM0216-001	SIGNAL CORD	1		
	A 7	RM-SMXJ570V	REMOCON	1		
	A 8	----------	BATTERY	1		
	A 9	MXJ680K-SPBOX-L	SP ASSY(L)	1	SP-MXJ680V	
		MXJ680K-SPBOX-R	SP ASSY(R)	1	SP-MXJ680V	
		MXJ570K-SPBOX-L	SP ASSY(L)	1	SP-MXJ570V	
		MXJ570K-SPBOX-R	SP ASSY(R)	1	SP-MXJ570V	
	A 10	199732080110	SP NET(L)	1	SP-MXJ680V	
		199732080111	SP NET(R)	1	SP-MXJ680V	
		199732080098	SP NET(L)	1	SP-MXJ570V	
		199732080101	SP NET(R)	1	SP-MXJ570V	

VICTOR COMPANY OF JAPAN, LIMITED
AUDIO & COMMUNICATION BUSINESS DIVISION
PERSONAL & MOBILE NETWORK B.U. 10-1,1chome,Ohwatari-machi,Maebashi-city,371-8543,Japan

(No.20853)

Printed in Japan
200007(V)